Precision Spray Nozzles for the Food and Beverage Industry

Food and Beverage Industry

LECHLER – YOUR COMPETENT NOZZLE TECHNOLOGY PARTNER

The food and beverage industry is facing enormous challenges. To offer consumers a more extensive product range improved processes are required.

At the same time, increasingly strict hygiene regulations and increasing rationalisation pressure are demanding highly efficient and safe processes.

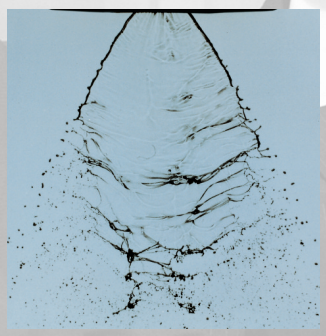

Lechler develops and manufactures precision nozzles for various applications. For this we can fall back on all the experience of our 130-year history. The extensive knowledge of nozzles among our 670-strong workforce and a deep understanding of typical industry processes mean that we have been at the forefront of innovation in nozzle technology for many years.

Today, Lechler manufactures nozzles in Germany, England, Hungary, India, China and the USA. But despite this international alignment, at our heart we remain a Swabian family company with the typical passion for precision, innovation and the drive to always become that little bit better. Other subsidiary companies plus more than 40 representative offices round off our global sales network.

WIDE RANGE OF SERVICES FOR YOUR SUCCESS

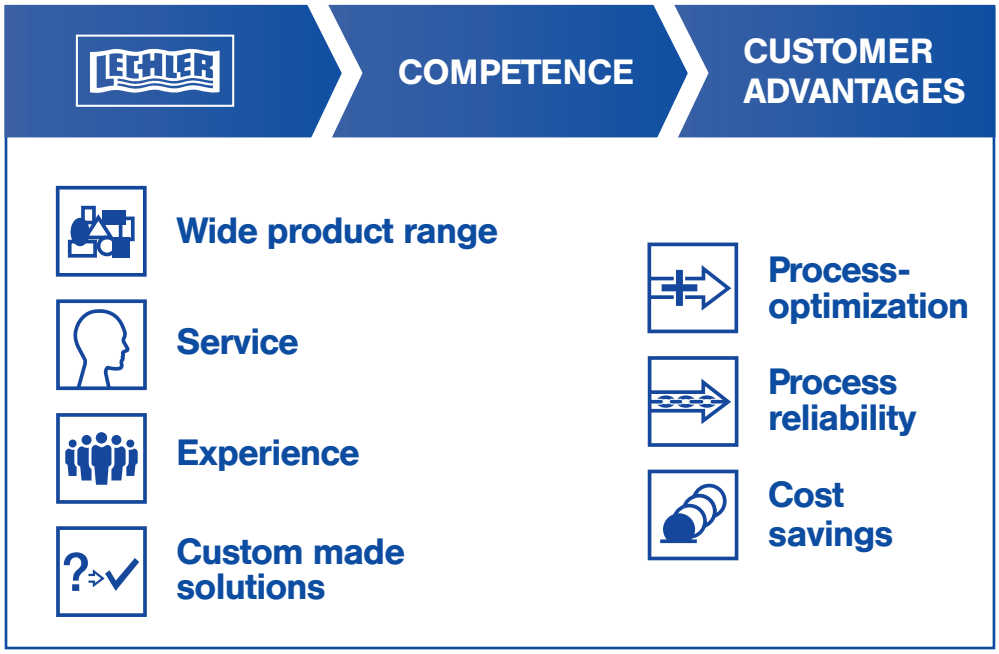

Nozzles for the food and beverage industry

In this brochure we have compiled for you an overview of our tried-and-tested nozzles for the food and beverage industry.
If you cannot find a suitable solution for your particular job, please contact us. Our applications engineers would be happy to develop the optimum solution for your needs.

We will support you with our solutions right along the process chain:

- **Desinfection and hygiene**
- **Product provision**
- **Product treatment**
- **Filling and packing**

Thanks to our detailed knowledge of the individual process steps, we are also able to offer you advice on an individual basis and work out custom solutions for you.

You will find more information, ideas and tools for using nozzle technology and spraying technology at www.lechler.de

LECHLER NOZZLES ARE USED IN MANY FIELDS IN THE FOOD AND BEVERAGE INDUSTRY

Product provision

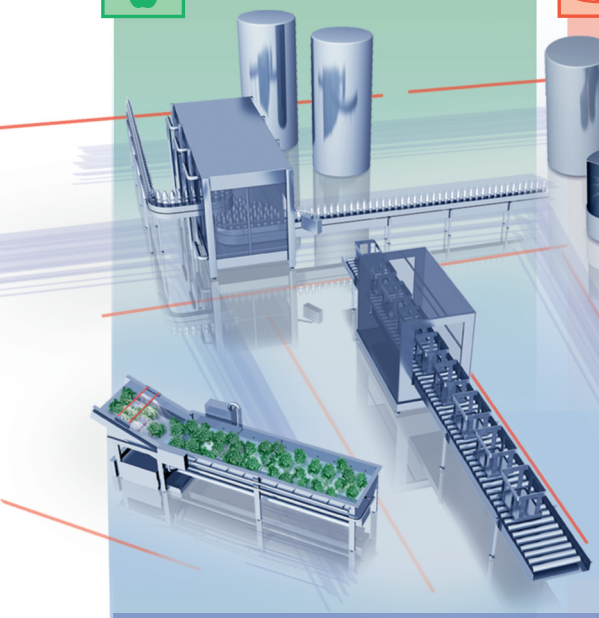

Product treatment

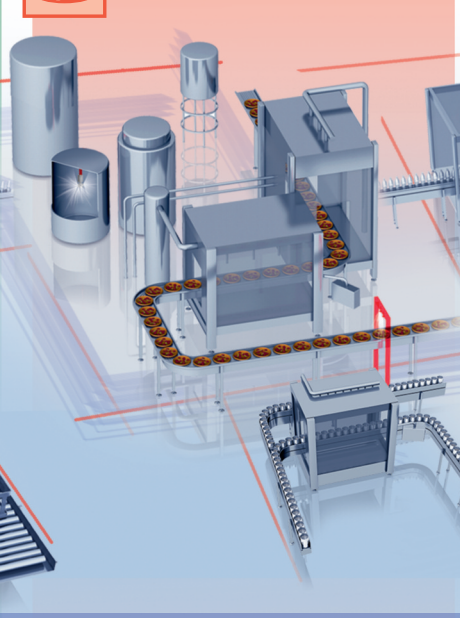

Filling and packing

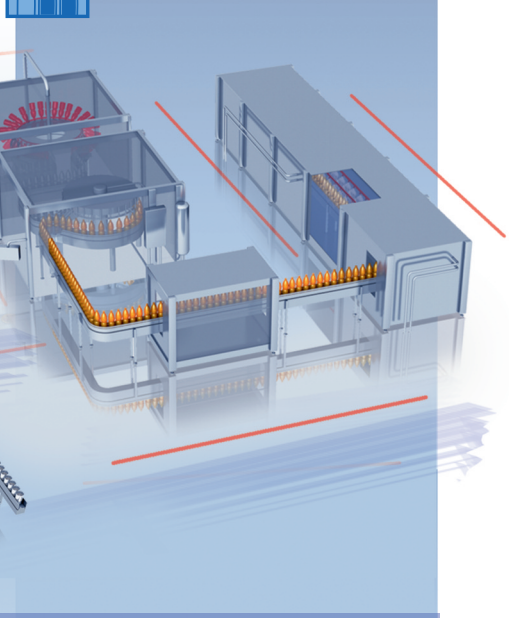

Tank cleaning / CIP

Belt lubrication

Belt cleaning

- Container washers
- Cleaning of fruit and vegetables
- Pretreatment of equipment
- Humidification
- Bottle and barrel cleaning
- Filter cleaning

- Product cleaning
- Release agent spray deposition
- Dosing
- Coating
- Degassing of liquids
- Concentrating
- Belt cooling
- Spray drying

- Filler cleaning
- Pasteurisation
- Sterilization
- Sorting cans and bottles
- Sorting with air
- Anti-scuffing
- PET bottle cooling

Disinfection and hygiene

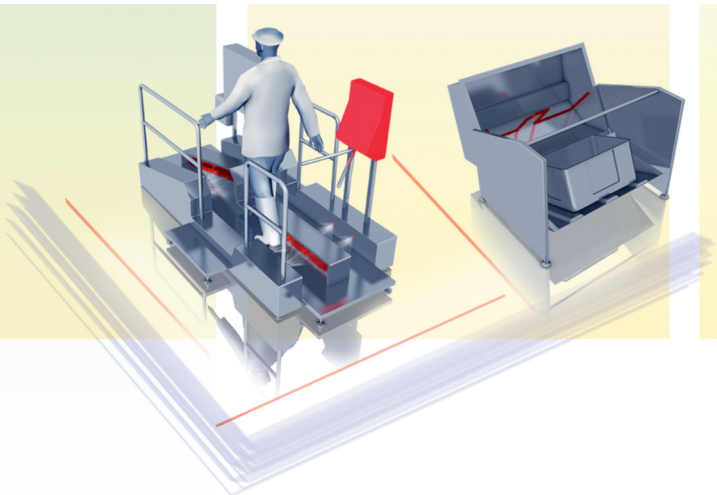

- Disinfection
- Hand disinfection
- Boot disinfection
- Room disinfection
- Work sluices

LECHLER NOZZLES FOR DISINFECTION AND HYGIENE APPLICATIONS

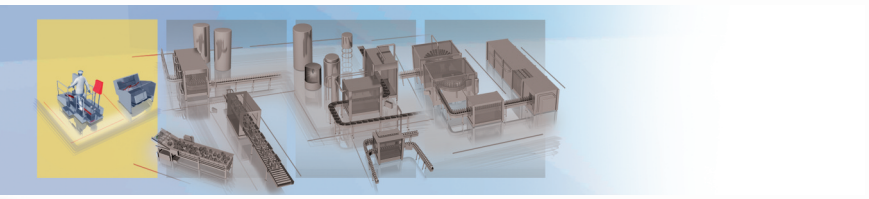

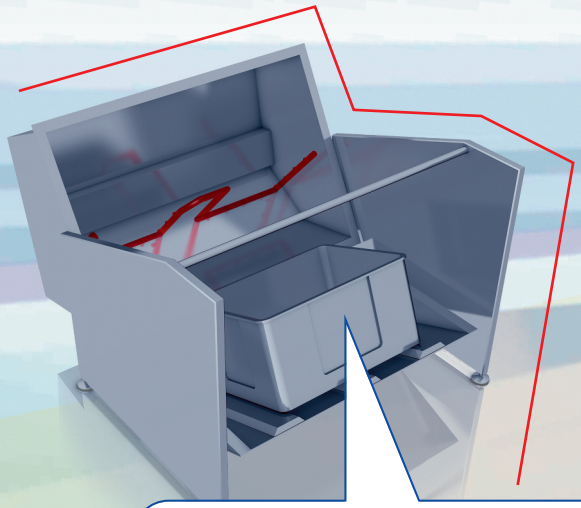

Hand disinfection

Hygiene sluices are a fundamental element of production that is as free from germs as possible. **Hollow cone nozzles** atomize disinfectants very finely and thereby ensure wide surface coverage and high disinfectant efficiency.

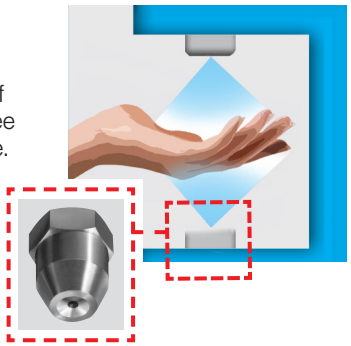

Work equipment disinfection

Short throughput times are needed when cleaning and disinfecting trolleys and containers for production. **Flat fan nozzles** with a high spray force are the first choice for that job.

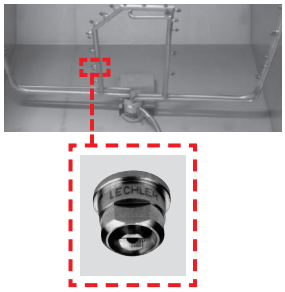

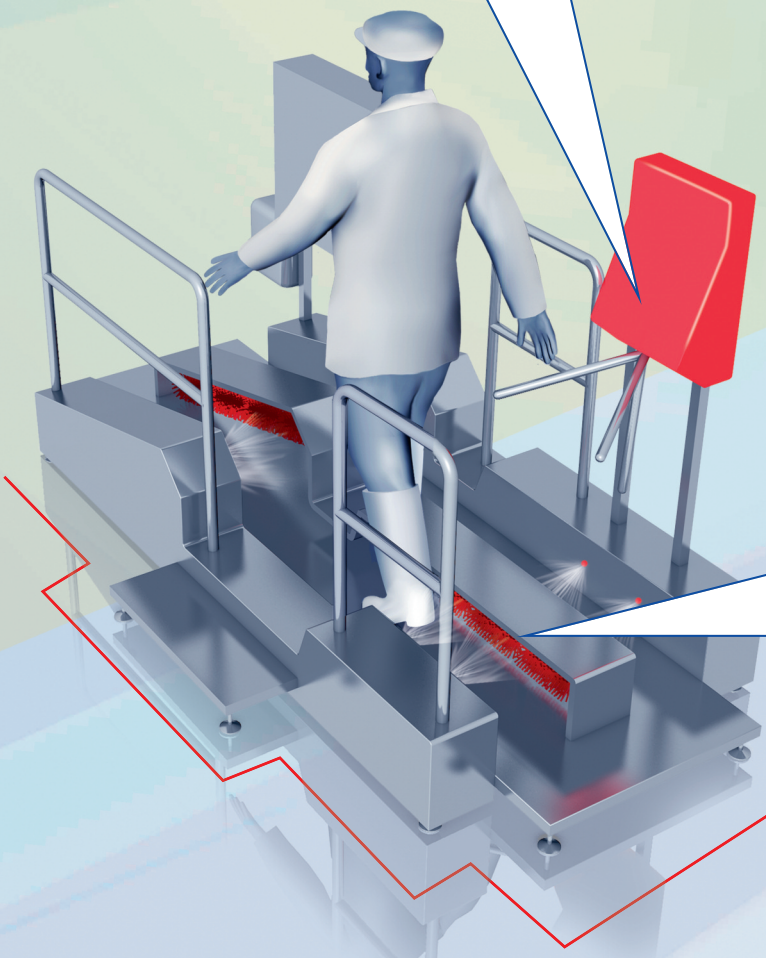

Sole and boot cleaning

These systems are mostly linked in combination with hand disinfectant systems. For cleaning the brushes and spraying with new disinfectant, we recommend our **series 632 and 686 flat fan or tongue-type nozzles**.

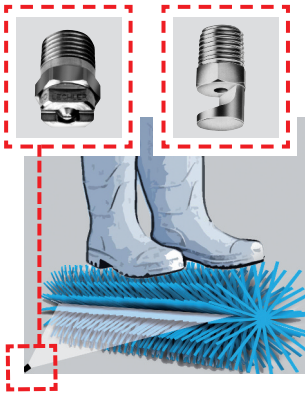

LECHLER NOZZLES FOR PRODUCT PROVISION APPLICATIONS

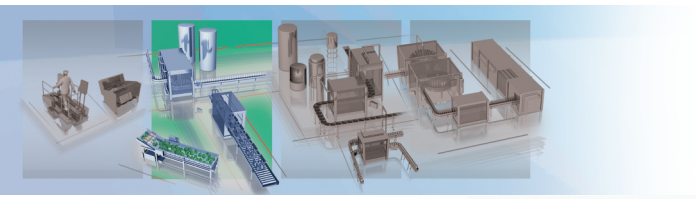

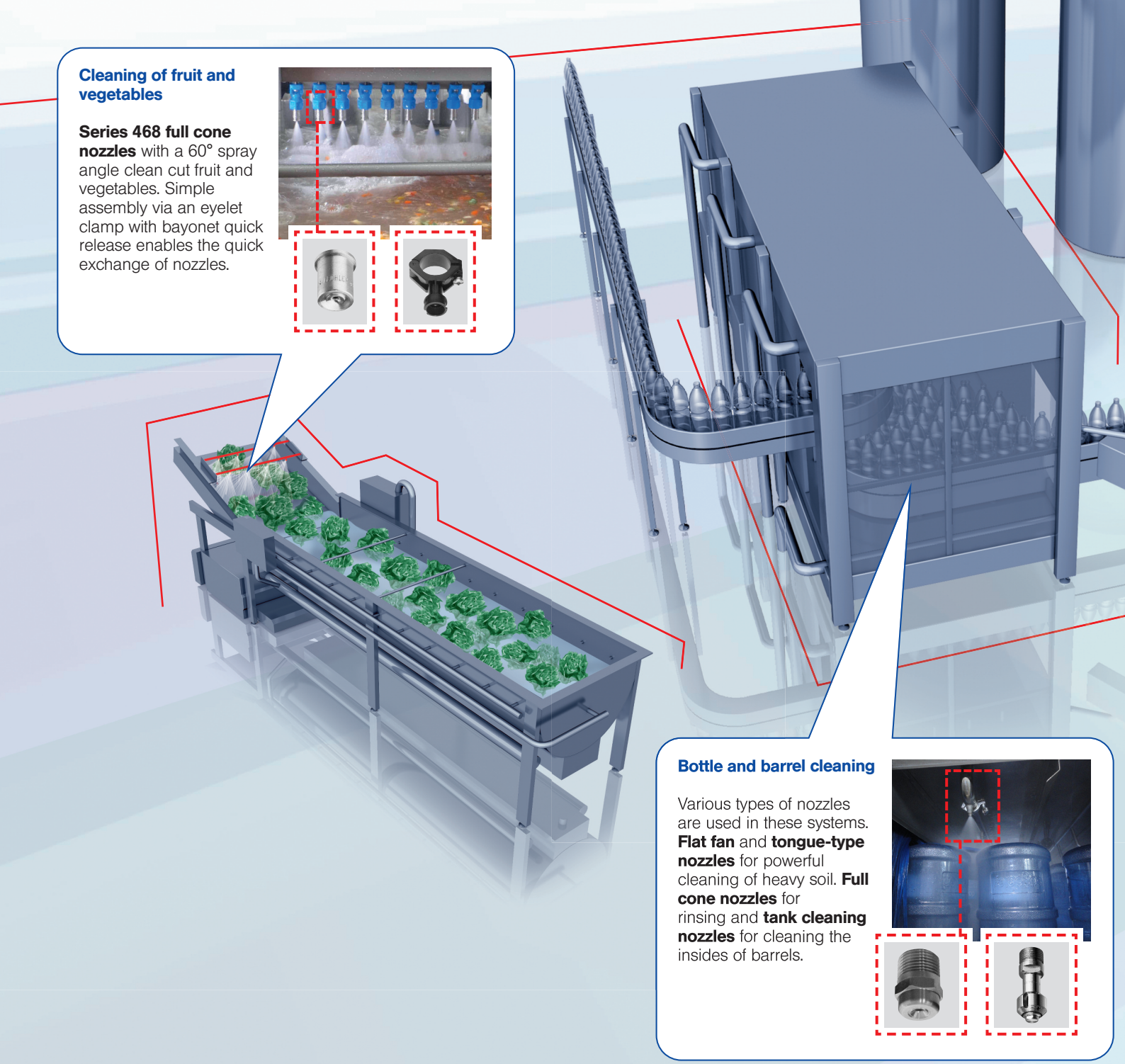

Cleaning of fruit and vegetables

Series 468 full cone nozzles with a 60° spray angle clean cut fruit and vegetables. Simple assembly via an eyelet clamp with bayonet quick release enables the quick exchange of nozzles.

Bottle and barrel cleaning

Various types of nozzles are used in these systems. **Flat fan** and **tongue-type nozzles** for powerful cleaning of heavy soil. **Full cone nozzles** for rinsing and **tank cleaning nozzles** for cleaning the insides of barrels.

Machine cleaning and tank cleaning

High impact tank cleaning machines and **tank cleaning nozzles** with controlled rotation speed were specially developed for tackling very heavy soil.
The example shows the **high impact tank cleaning machine 5TM** in a bottle washing machine.

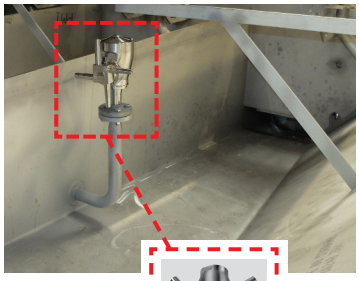

Other nozzle applications in the product provision field

- Humidification
- Filter cleaning
- Foam suppression
- Animal carcass cleaning
- Drum and plate washing systems e.g. for cleaning fish
- Cleaning, lubricating cutting knives, belts and other equipment.
- Sorting procedures with air
- Blowing off surfaces with air

Pack washers

In most cases, cleaning is performed with a mixture of immersion baths and spraying stations. The preferred option for the latter is **flat fan nozzles**. **Tongue-type nozzles** produce a particularly powerful flat fan at low pressure.

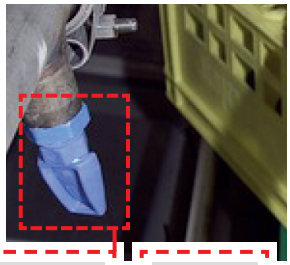

LECHLER NOZZLES FOR PRODUCT TREATMENT APPLICATIONS

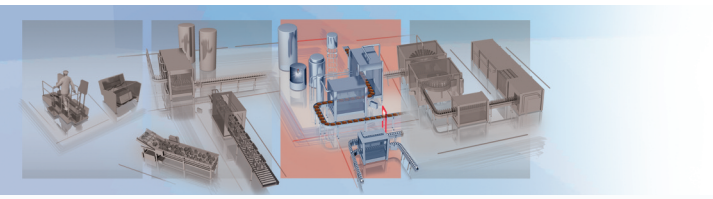

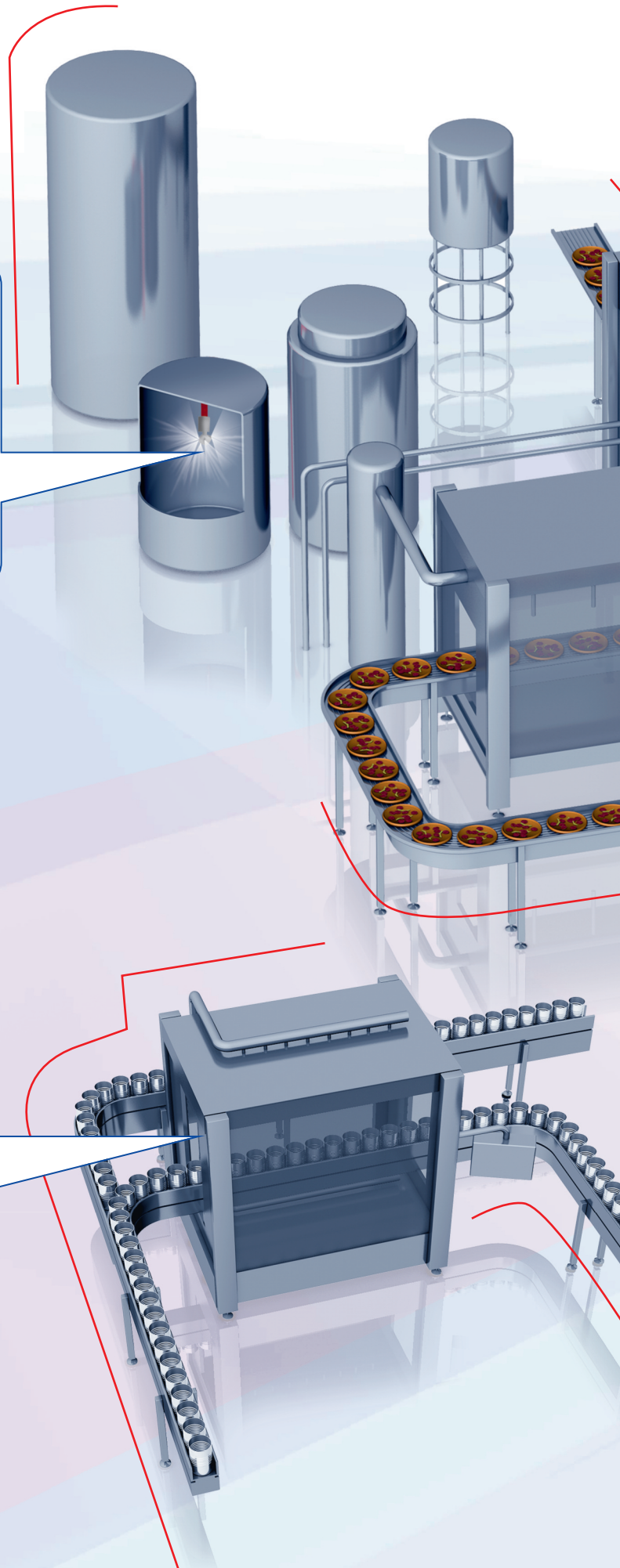

Tank cleaning

Optimum tank cleaning requires targeted harmonization with the respective application. Lechler offers a wide range of rotating nozzles and will support you in finding the right arrangement.

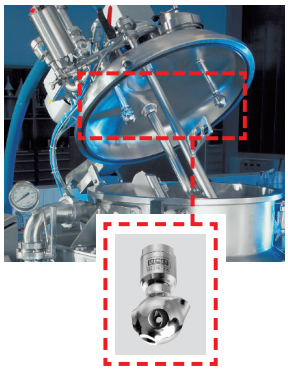

Sausage cooling

In the meat-processing industry, sausage products are cooled by means of sausage showers. **Full cone nozzles or cluster head nozzles** are frequently used for that.

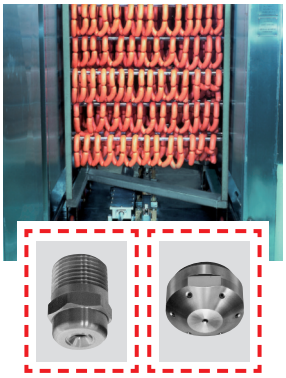

Can cleaning

Before the foodstuffs are transferred, the cans must be disinfected on both the outside and inside. **Flat fan nozzles** and **full cone nozzles** can be used for this.

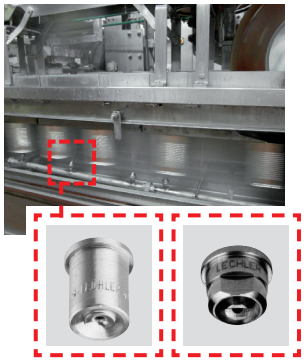

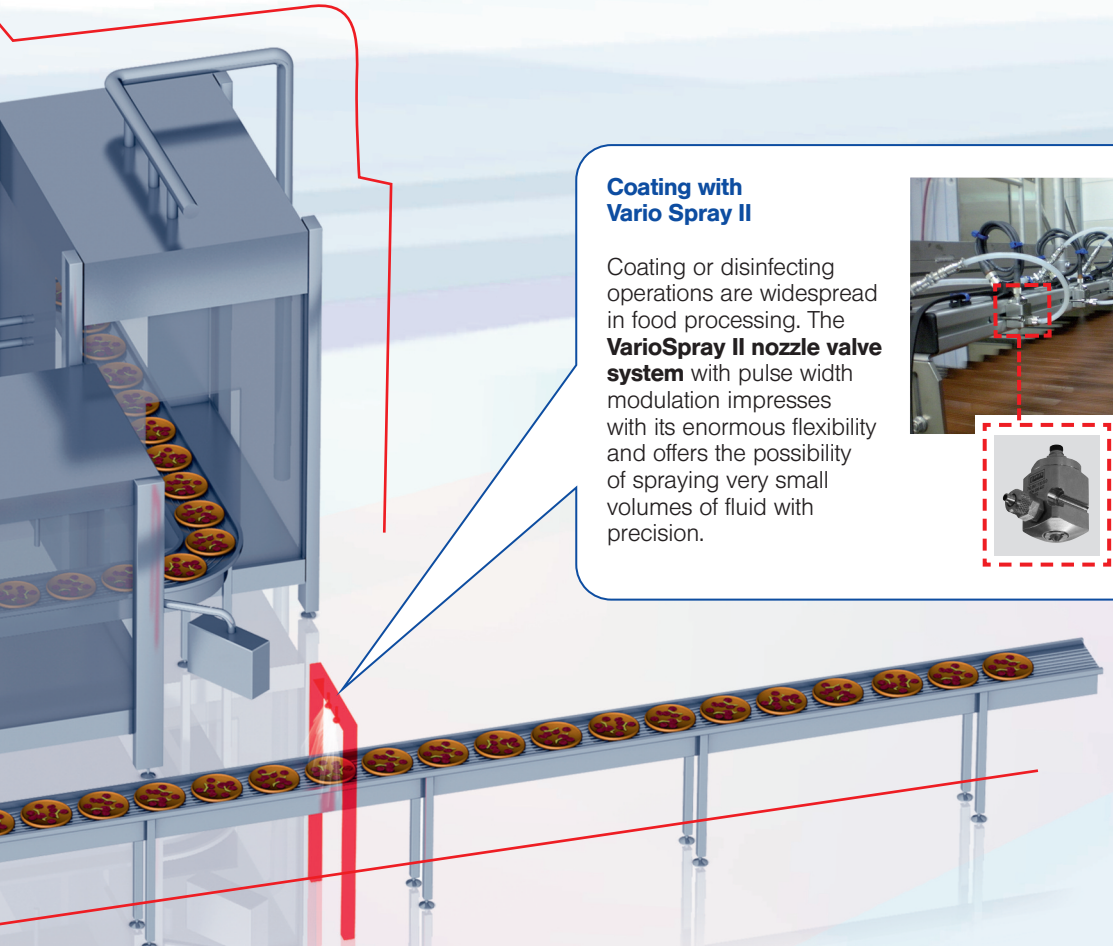

Coating with Vario Spray II

Coating or disinfecting operations are widespread in food processing. The **VarioSpray II nozzle valve system** with pulse width modulation impresses with its enormous flexibility and offers the possibility of spraying very small volumes of fluid with precision.

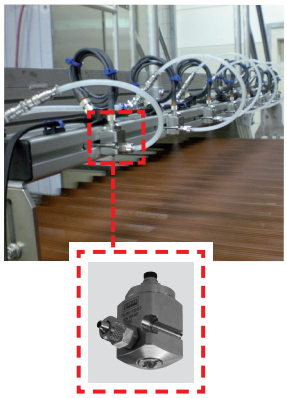

Belt cooling

With belt cooling, the product (e.g. rissoles) is transported on a belt. The underside of the belt is sprayed with water or a coolant. Due to the fine droplets, **hollow cone nozzles** are often used for this process.

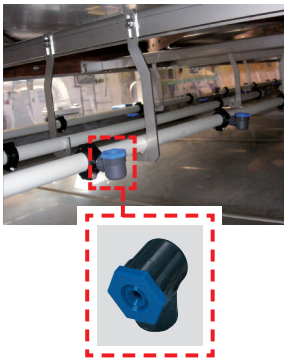

Other applications

- Product cleaning
- Dosing
- Concentrating
- Degassing of liquids
- Release agent spray deposition
- Spray drying
- Blanching of vegetables
- Sugar production
- Tobacco processing

LECHLER NOZZLES FOR FILLING AND PACKING

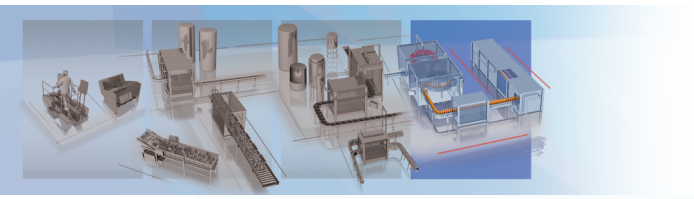

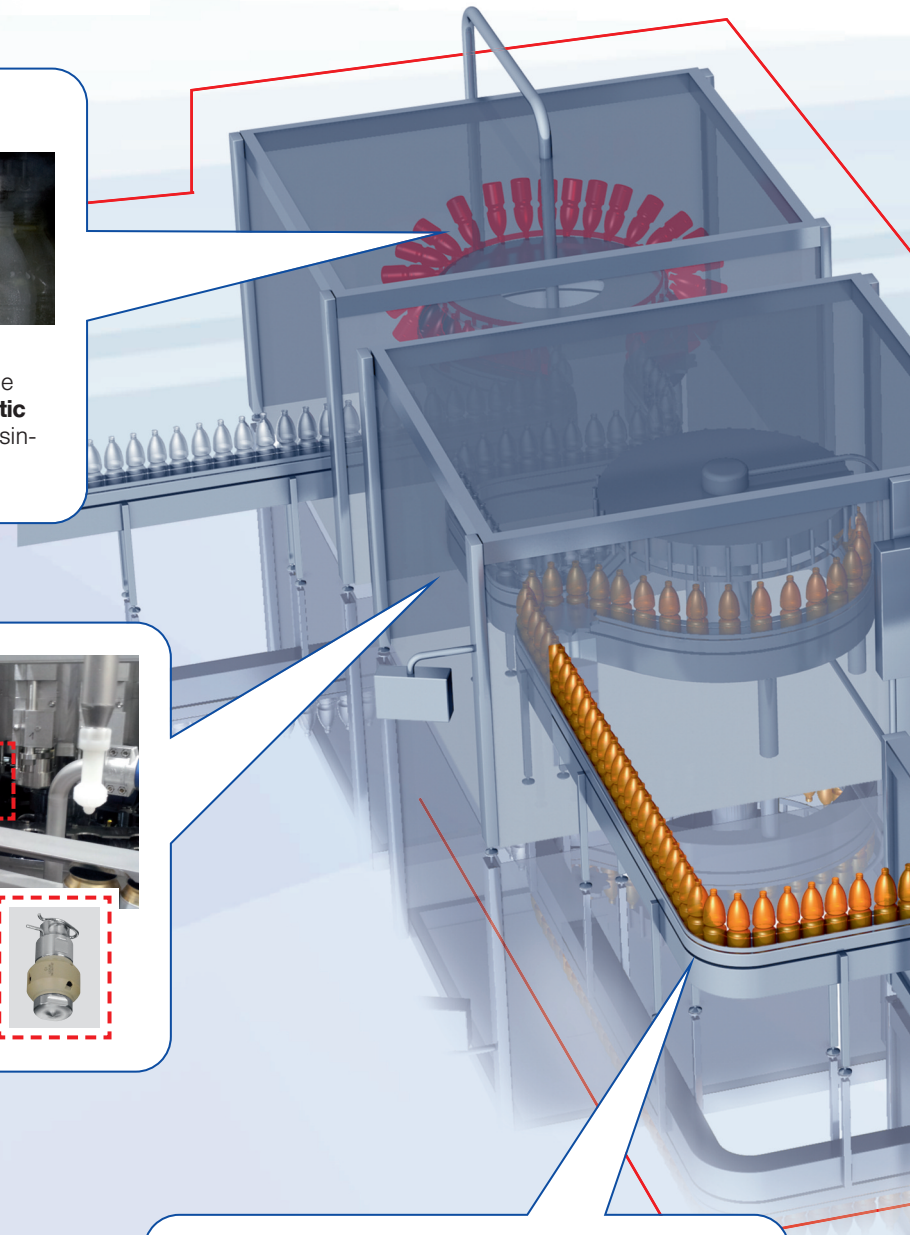

Sterilisation

Disinfection is a central step in the production of food and beverage. The example shows **series 136 pneumatic atomizing nozzles** for the internal disinfection of PET bottles.

Filler cleaning

Filling machines are cleaned regularly via a permanently installed nozzle system. For this job, Lechler supplies various **rotating cleaning nozzles** and **hygienically designed nozzles** with FDA and EHEDG approval.

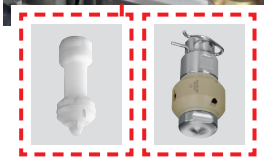

Belt lubrication

This term refers to spraying a soapy solution, known as the belt lubricant, onto the conveyor belt in order to reduce the friction coefficient. Special **series 652 xxx. 8H.03 flat fan nozzles** are used for this.

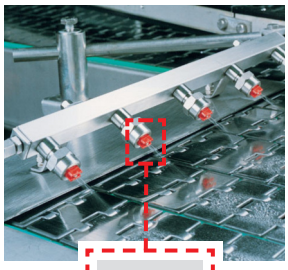

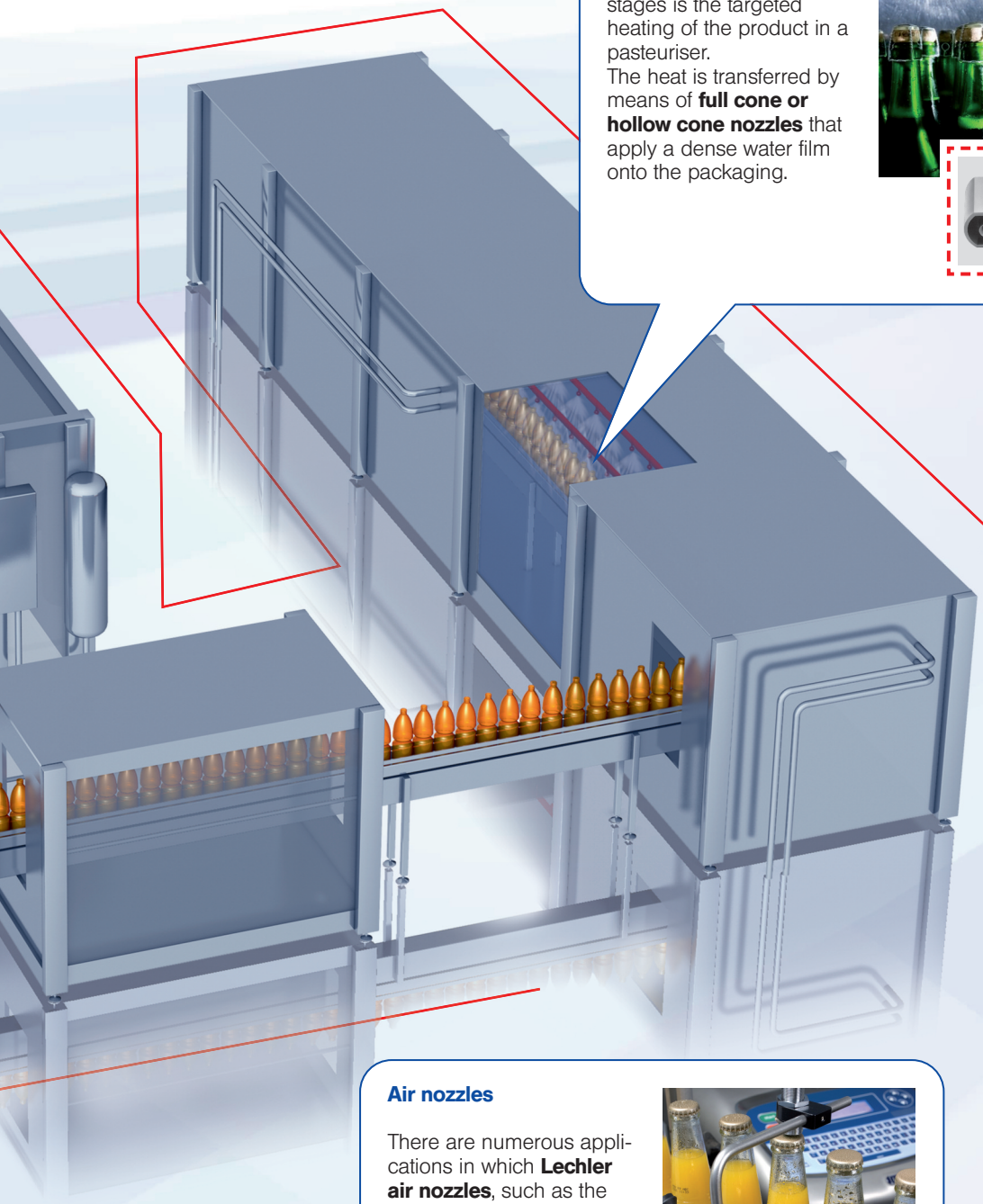

Pasteurisation

One of the final production stages is the targeted heating of the product in a pasteuriser.
The heat is transferred by means of **full cone or hollow cone nozzles** that apply a dense water film onto the packaging.

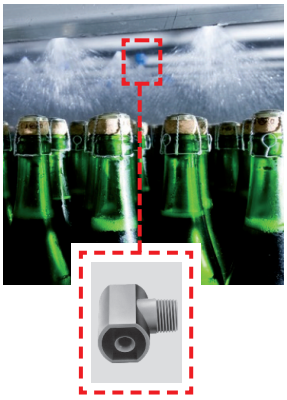

Other applications

- Rinsing of bottles
- Anti-scuffing
- Cooling and moistening bread
- Release agent application
- Drying labels and bottles
- Sorting cans and bottles
- Sorting with air
- PET bottle cooling

Air nozzles

There are numerous applications in which **Lechler air nozzles**, such as the **Whisperblast® series**, are preferred due to the low level of noise produced compared to the standard **air nozzles**.
In the example on the right, **Whisperblast® nozzles** are being used for drying the seal so that the subsequent marking is not smudged.

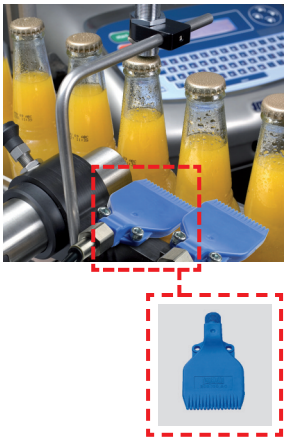

WHAT YOU SHOULD KEEP IN MIND WHEN PLANNING

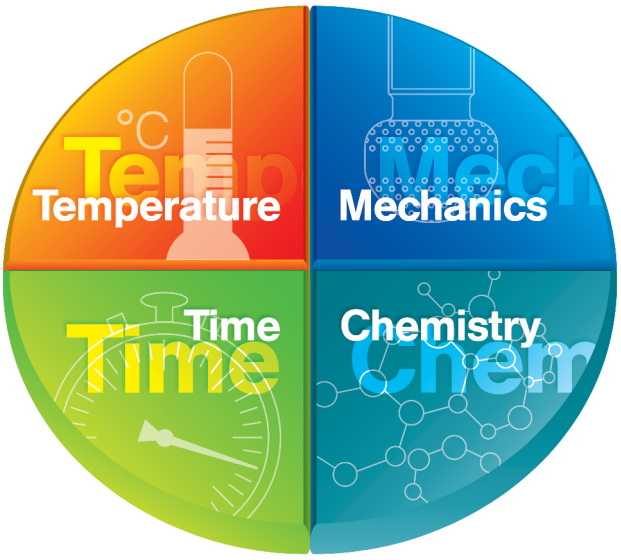

Figure 1: Sinner's circle with equal proportions of the temperature, time, chemistry and mechanical factors.

① The fundamentals of cleaning technology

Sinner's circle

The Sinner's circle illustrates the interplay between the four main factors for successful cleaning:

- Chemistry (choice of cleaning agent)
- Mechanical (removal of soil via pressure or friction)
- Temperature (at which cleaning is performed)
- Time (duration of the total cleaning processes)

The proportion of the individual factors as a part of the entire cleaning can be varied, provided that the total is 100 per cent. This results in significant savings potentials.

As a result, the intensification of mechanical cleaning enables the consumption of cleaning agents or the duration of cleaning to be reduced. Consequently, the mechanical factor that takes up a greater part of the Sinner's circle, while the other factors can end up being reduced.

Cost reduction by efficient cleaning processes

This is precisely where our nozzles and rotating cleaning nozzles come into play, having been specially developed for delivering a high mechanical cleaning action. Their greater efficiency helps to permanently reduce on going costs for energy and cleaning agents, and also the duration of cleaning. Consequently a one-off investment in improved nozzle technology pays for itself after only a short time.

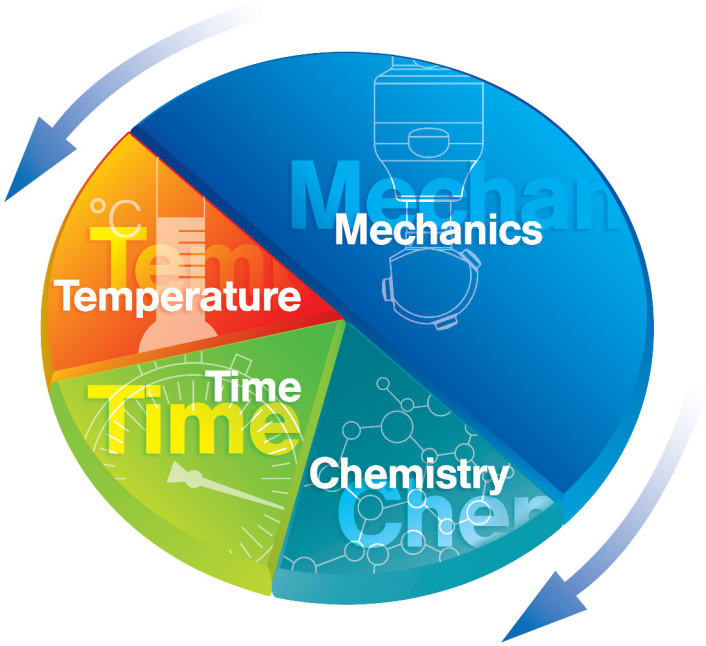

Figure 2: Lechler nozzles and rotating cleaning nozzles have high mechanical cleaning efficiency. This reduces the proportion of the other factors, as well as the resulting costs.

② Mechanical cleaning effects with Lechler rotating cleaning nozzles

Mechanical cleaning

Rotating cleaning nozzles deliver the greatest impact when cleaning the surface area of the tank. To achieve this, large droplets must strike at high speed. This enables thick soil to be removed that cannot dissolve in the cleaning fluid. Important influencing factors are the distance between the nozzle and wall, and the operating pressure. If either are too great the fluid will break down into smaller droplets (see Figs. 3 and 4) and the impact will be re-duced.
Besides the impact, the fluid running down the tank wall also has a significant cleaning effect. If the formed film is thick enough, the resulting shear stresses can remove light to moderate soil. In that case, unsprayed patches are less of an issue than is the case during impact cleaning (see Fig. 5).

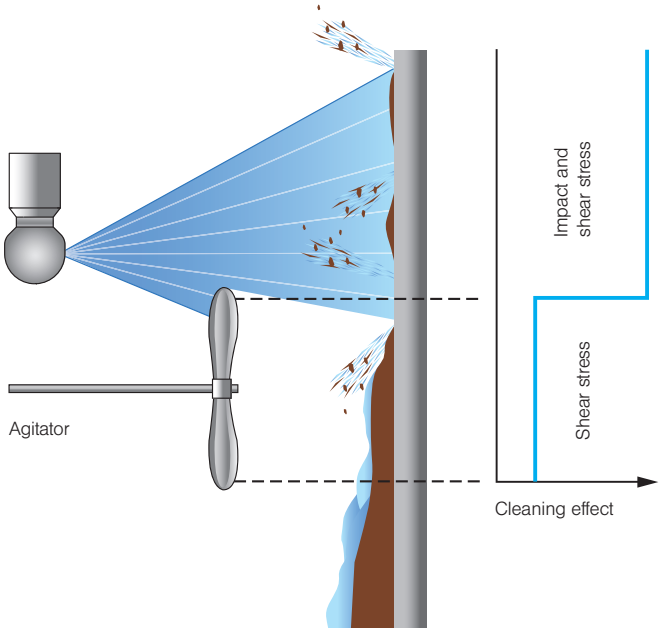

Figure 5: Cleaning mechanisms, impact and shear stress

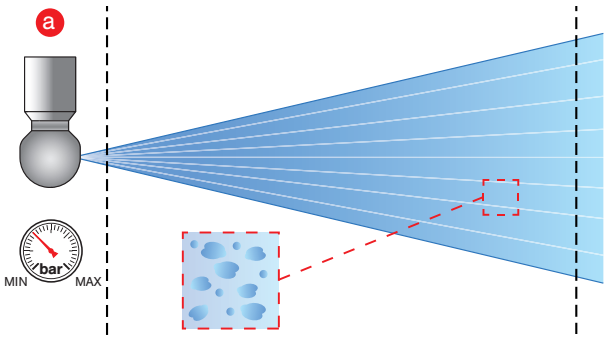

Figure 3: Rotating cleaning nozzles with recommended operating pressure

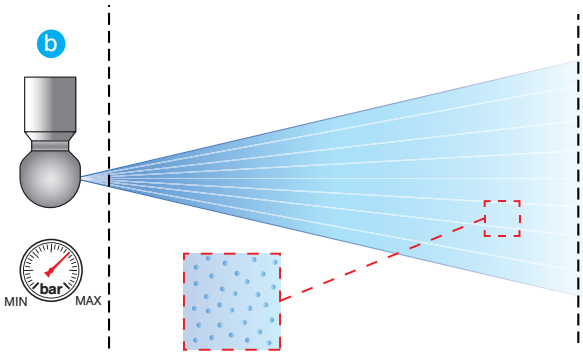

Figure 4: Rotating cleaning nozzles with operating pressure too high

Comparison of rotating cleaning nozzles and static spray balls

Due to their simple construction, static spray balls are economical and are likely to miss important areas.
Whereas rotating cleaning nozzles spray the entire container wall in a fan-like pattern, the jets from spray balls strike only in concentrated spots. The remaining surface is simply cleaned by the shear stresses of the fluid running off (see Fig. 6). The fluid consumption is therefore significantly greater in comparison with rotating cleaning nozzles.

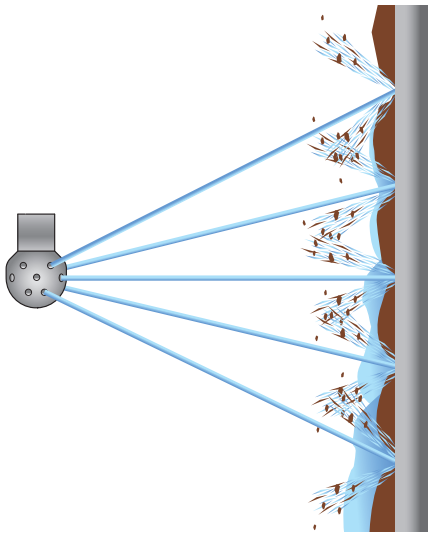

Figure 6: Cleaning with a static spray ball

③ Influence of chemistry and temperature

The chemical cleaning effect takes part in almost all tank cleaning applications when the soil is dissolved in the cleaning medium or the bonding between soil and tank surface is reduced. Higher temperatures can support the chemical cleaning effect.

Foam cleaning with nozzles

Foam cleaning is primarily based on the chemical cleaning effect. Since the foam sticks more firmly to the surface, it can be more effective than cleaning fluids that drip off quickly. The mechanical cleaning effect plays a correspondingly subordinate role. Here, the task of the nozzle is to distribute the foam evenly. Your end result for this application depends on the type of foam.

④ Impact

The force of impact when using a liquid jet on a surface plays an important role in cleaning technology.
The ratio of the force (F) to the surface (A) is referred to as the Impact (I).

$$I = \frac{\text{Impact force}}{\text{Impact surface}} = \frac{F}{A}\left[\frac{N}{m^2}\right]$$

It can be controlled via the following parameters:

Surface and spray angle

The impact surface is the area where the droplet strikes. The smaller the surface area, the greater the impact values. Nozzles with high impact are, for example, solid stream nozzles and flat fan nozzles with a narrow spray angle.

Pressure

The impact increases linear with the connected pressure. If you double the pressure while maintaining the same flow rate, you also double the impact.

Flow rate

Increasing the flow rate by using a larger nozzle increases the impact, assuming that the other parameters (spray angle, pressure and medium) remain the same.

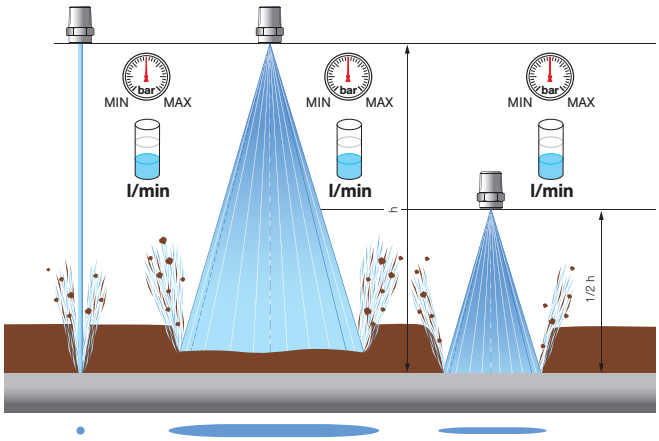

Figure 8: Comparison of the cleaning result of three nozzles with identical pressure and flow rate.

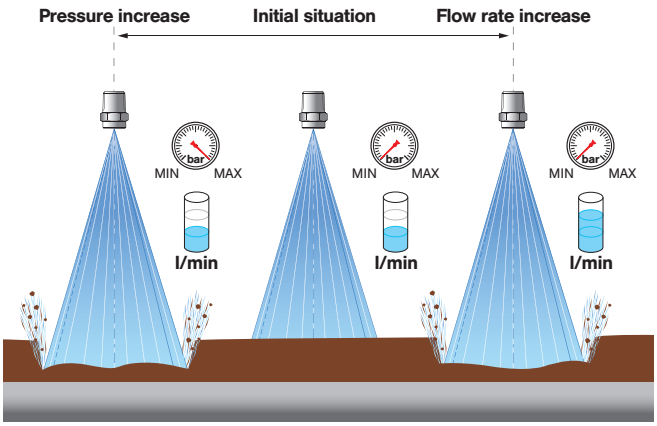

Figure 9: Comparison of the cleaning result of three nozzles with pressure or flow rate increase.

Figure 7: Foam cleaning with a Lechler PVDF MicroWhirly

⑤ Spray angle, spraying distance, spraying behaviour

Depending on the version and job, we supply single-fluid nozzles with differently stepped spray angles from 0° (solid stream nozzles) to 360° (tank-cleaning nozzles). The quoted spray angles apply close to the nozzle and in a still atmosphere. Gravity and air flows influence the spray pattern.

Depending on the version, single-fluid nozzles can spray the fluid as a hollow cone, solid stream or flat fan. The solid stream nozzle does not spray, but rather produces a closed jet that hits at a concentrated point. The jet only begins to break up after some distance. Twin-fluid nozzles have a narrow spray angle of approximately 20° due to the high speed at which the compressible medium exits. However, as the distance from the nozzle increases, the spray pattern becomes increasingly less sharply delimited. Twin-fluid nozzles normally produce full cone or flat fan spray patterns.

Height of the nozzle position

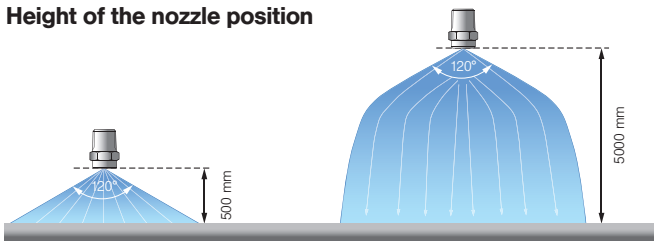

The diagram above illustrates how height influences the spray pattern

Changing the nozzle pressure

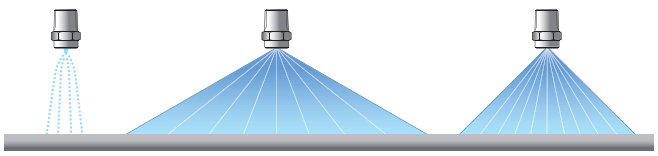

Pressure: Very low Pressure: Optimum Pressure: Very high

Spraying direction

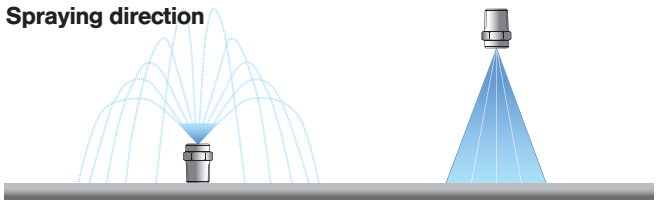

Spraying upwards Spraying downwards

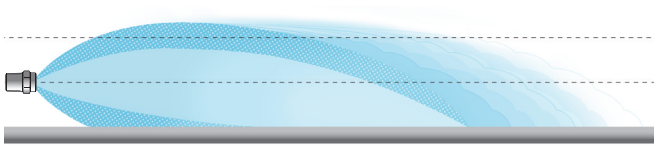

Horizontal spraying

Figure 10: Spray patterns under different working conditions and installations

⑥ Viscosity

Increasing viscosity of the fluid can reduce the flow rate, changes the spray pattern (narrower spraying angle) and allows the droplet spectrum to become coarser.

Depending on the fluid properties, it is possible to counteract this to a certain extent by means of higher pressure. For very viscous substances, it is recommended to use twin-fluid nozzles in most cases. It can also be helpful to take account of the fluid's rheology.

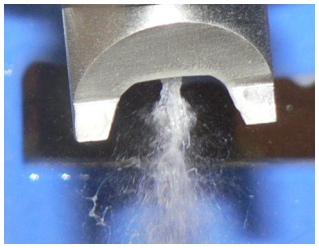

Figure 11: Atomization of gelatine with a Lechler ViscoMist twin-fluid nozzle

⑦ Droplet sizes

Twin-fluid nozzles can produce very fine to extremely fine droplets. The size depends mainly on the flow rate ratio of the compressible medium used (m^3/h) to the atomized fluid (l/min): The greater the ratio, the finer the atomization. In the case of single-fluid nozzles however, the decisive factors are pressure, nozzle type and flow rate across the droplet spectrum. Increasing pressure results in finer atomization, but mostly only up to a certain level.

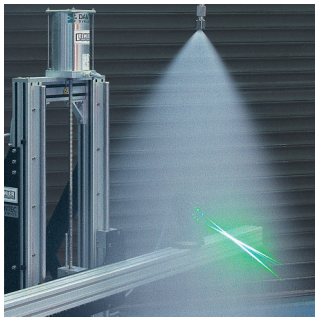

Figure 12: Droplet size measurement

Hollow cone nozzles produce very fine to fine droplets at the same pressure and flow rate. Full cone nozzles produce slightly coarser droplet spectrums, and finally flat fan nozzles have the coarsest droplet spectrum.

The following generally applies: Within a series and at a given pressure, nozzles with a lower flow rate produce finer droplet spectrums than nozzles with a higher flow rate.

⑧ Liquid distribution

An even liquid distribution is crucial to processes such as coating. This requires several nozzles to be arranged next to each other. This is because whereas a single nozzle would produce a parabolic liquid distribution, several nozzles arranged next to each other allows an almost even distribution via overlapping.

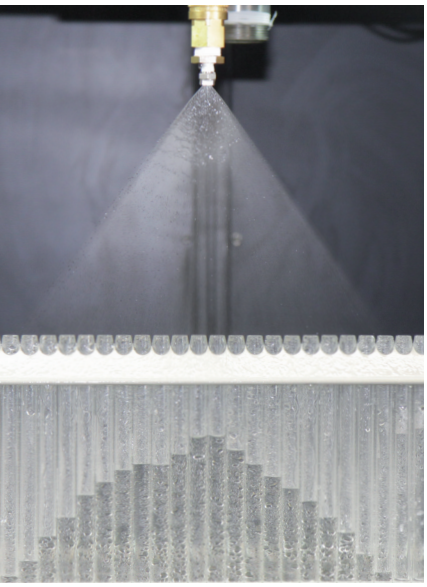

Figure 13: Liquid distribution measurement

Measuring the distribution

The liquid distribution in a plane can be determined with the aid of a combination of Plexiglas cylinders. The filling level of the individual cylinders is determined fully automatically. This measuring process can also record the liquid distribution of a nozzle over a moving measuring plane. This enables conveyor belt spraying to be simulated, for example.

⑨ Temperature behaviour of nozzle materials

Applications with temperatures up to 140 °C are very common. These include for example most cleaning applications and sterilisation processes. Applications with higher temperatures are rare, and applications at very low temperatures are even rarer. The general temperature information from material data sheets must always be scrutinised for every single case of nozzle use. Pressure, mechanical stress type, chemistry and time are decisive factors for the suitability of a nozzle material at increased temperatures. Chemical processes can be more aggressive at high temperatures.

A material may be able to withstand them if this temperature occurs for a very short period only. In all materials, high temperatures result in reduced strength values. The mechanical stress type must therefore also be taken into account in high-pressure applications in particular.
In addition, vibrations in the system can cause premature failure.

⑩ Narrowest cross section

The risk of a nozzle blocking depends greatly on its narrowest cross section (ØE). Experience has shown that for smooth operation, the maximum particle size in the fluid should not exceed one third of the narrowest cross section.

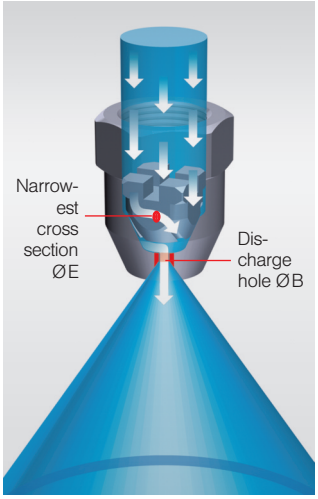

Figure 14: Narrowest free cross section

Hollow cone and full cone nozzles with axial flow have an internal swirl. Hollow cone and full cone nozzles with inflow at the side (tangential or eccentric design) do not need a swirl and are therefore much less prone to blockages. In the field of flat fan nozzles, our tongue-type nozzles represent a special design that is less susceptible to blockages.

⑪ Connections

Nozzles are mainly constructed with the thread standards ISO 228, DIN 2999 (EN 10226-1) and NPT.
A distinction is made here between sealing and non-sealing threads. In the case of non-sealing threads, Teflon® strip or a thread paste is used to provide the seal. Not all nozzles can be connected with a thread. For these we supply flange solutions conforming to the standards DIN 2527, EN 1092-1 and ASME B 16.5. Aseptic clamp connections (Tri-Clamp connections) conforming to the standard DIN 11864-3 are also possible. Whether a connection other than the standard connection is feasible for a nozzle must be decided on an individual case basis.

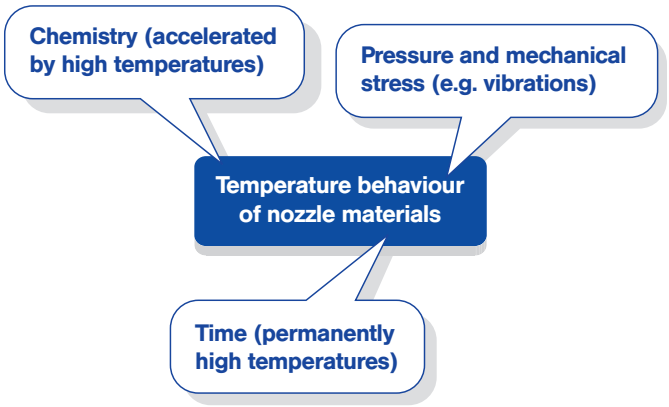

⑫ Materials

Lechler precision spray nozzles are made of extremely high-grade materials that are designed to meet high requirements such as resistance to cleaning chemicals or temperature influences. The large choice of different materials – e.g. stainless steel AISI 316L, PVDF, PEEK or PTFE – allows nozzle selection customized to the individual application and operating conditions. In addition, the materials used for the tank and equipment cleaning nozzles are perfectly matched to each other and are thus characterized by very low wear.

The product pages for the individual nozzles provide information on the materials available for the different nozzle types.

In addition to the requirements for material resistance and wear, the materials must also be food grade for use in the beverage, food and pharmaceutical industries. Depending on the application area, the materials must meet different demands.

A large number of the materials used for Lechler precision spray nozzles comply with the requirements of the FDA or conform to (EC) No. 1935/2004.

Further information on conformity is provided on the product pages.

The FDA, the U.S. Food & Drug Administration, is a federal agency which oversees those two industries. Materials used in making Lechler products are compliant with the requirements of FDA regulation 21 CFR for use in food applications.

The regulation (EC) No. 1935/2004 of the European Parliament regulates general safety requirements to all food and beverage contact materials.

Within this regulation, it is additionally stipulated that plastics must comply with (EU) 10/2011.

The respective logo on the product pages indicates which requirements are met.

⑬ Hygiene requirements

Lechler‘s precision spray nozzles are designed so that they meet hygiene requirements.

This is reflected, for example, in the self-draining function, minimized dead space in the nozzles as well as an external design without unnecessary gaps and edges. At the same time, the nozzles are designed with the lowest possible surface roughness.

Lechler also offers specially certified nozzles for particular hygiene requirements. The »Teflon® Whirly« and 527 series are 3A-certified, for example.

»3-A® Sanitary Symbol Council Administrative Council for Spray Cleaning Devices (78-01)«

The 3-A® council is an organization in the USA that defines criteria for the cleanability of components in the dairy and food industry. Components and systems are examined to establish whether germs adhere to surfaces or existing soiling can be removed.

Components and systems are awarded a »3-A® certificate« only if they are easy to clean or if soil cannot be deposited in the first place.

European Hygienic Engineering and Design Group. The EHEDG also checks and certifies the hygienic design of components. Its procedure is similar to that of 3-A®. The »HygienicWhirly« series is EHEDG-certified.

The respective logo on the product pages of tank cleaning products indicates which requirements are met.

⑭ Nozzle wear, material certificates & ATEX

Nozzle wear

Nozzle wear depends greatly on the conditions of use and on the nozzle material. Normally, the nozzle's fluid discharge opening wears as a result of material abrasion. The following conditions of use can speed up wear:

- Solids in the fluid and also hard particles
- Operating the nozzle above the recommended pressure range
- Using chemically aggressive substances

The nozzle body can also wear from the outside if the nozzle is used in a harmful environment (corrosive gases, radiation, temperature, rebound water with particles).

Material certificates

Material certificates in accordance with DIN EN 10204 can be issued on request for almost all Lechler precision spray nozzles.

ATEX

Lechler offers specially designed nozzle series for use in explosive atmospheres. The »MicroWhirly« and »Whirly« series have an ATEX approval that was issued by an external certification institute.

Rotating cleaning nozzle »PicoWhirly«

Series 500.234

- Very compact design
- Self rotating
- Rotating solid jets
- Completely made of stainless steel

Material:
Stainless steel AISI 316L

Max. temperature:
200 °C

Recommended operating pressure:
3 bar

Installation:
Operation in every direction is possible

Filtration:
Line strainer with a mesh size of 0.3 mm/50 mesh

Bearing:
Kolsterised slide bearing

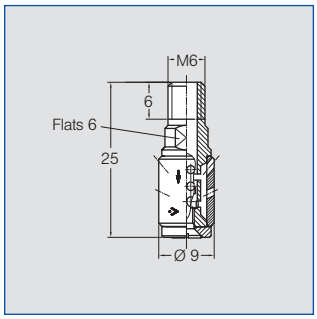

Spray angle	Ordering number	E Ø [mm]	V̇ [l/min] p [bar] (p_{max} = 5 bar) 1	2	3	at 40 psi [US gal./min]	Max. tank diameter [m]
300°	**500.234.G9.00**	1.8	5.7	8.0	9.8	2.5	0.9

E = Narrowest free cross-section

The maximum tank diameter shown above applies for the recommended operating pressure and is indicative only. The cleaning result is also affected by the type of soiling.

Operation with compressed air only for short-term usage. Operation above the recommended operating pressure means higher wear and smaller droplets. This might have adverse effects on the cleaning result.

Rotating cleaning nozzle »MicroWhirly«

Series 566

- Compact design
- Self rotating
- Effective flat jet nozzles

Materials:
Stainless steel AISI 316L and PEEK

Max. temperature:
130 °C

Recommended operating pressure:
2 bar

Installation:
Operation in every direction is possible

Filtration:
Line strainer with a mesh size of 0.3 mm/50 mesh

Bearing:
Slide bearing made of PEEK

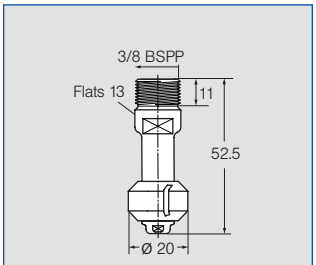

3/8 BSPP male thread

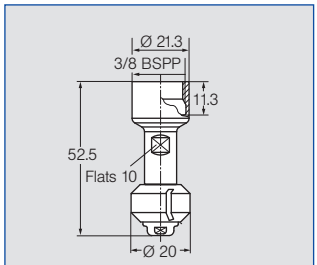

3/8 BSPP female thread

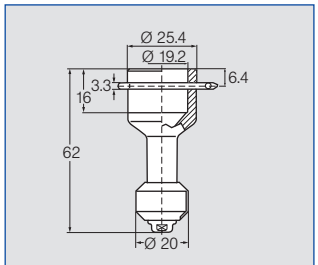

Slip-on connection
ASME - BPE 1997 (OD-Tube)

Spray angle	Ordering number				E Ø [mm]	V̇ [l/min] p [bar] (p_{max} = 6 bar)				Max. tank diameter [m]
	Type	Connection								
		3/8 BSPP* male	3/8 BSPP* female	3/4" Slip-on		1	2	3	at 40 psi [US gal./min]	
180°	**566.873.1Y**	**AE**	**AF**	**TF**	1	12	15	18	5	1.6
	566.933.1Y	**AE**	**AF**	**TF**	2.4	15	21	26	7	1.7
180°	**566.874.1Y**	**AE**	**AF**	**TF**	1	12	15	18	5	1.6
	566.934.1Y	**AE**	**AF**	**TF**	2.4	15	21	26	7	1.7
360°	**566.879.1Y**	**AE**	**AF**	**TF**	1	12	15	18	5	1.6
	566.939.1Y	**AE**	**AF**	**TF**	2.4	15	21	26	7	1.7

E = Narrowest free cross-section · *NPT and weld-on version on request

The maximum tank diameter shown above applies for the recommended operating pressure and is indicative only. The cleaning result is also affected by the type of soiling.

ATEX version on request

Operation with compressed air only for short-term usage. Operation above the recommended operating pressure means higher wear and smaller droplets. This might have adverse effects on the cleaning result.

Slip-on information: - R-clip made of stainless steel AISI 316L is included (Ordering number: 095.022.1Y.50.94.E)
- Depending on diameter of the adapter the flow rate can increase due to leakage between connecting pipe and rotating cleaning nozzle.

Example of ordering:	Type	+	Connection	=	Ordering no.
	566.873.1Y	+	**AE**	=	**566.873.1Y.AE**

Rotating cleaning nozzle »PVDF MicroWhirly«

Series 500.191

- Very inexpensive
- Self rotating
- Effective flat jet nozzles
- Completely made of PVDF

Material:
PVDF

Max. temperature:
90 °C

Recommended operating pressure:
2 bar

Installation:
Operation in every direction is possible

Filtration:
Line strainer with a mesh size of 0.3 mm/50 mesh

Bearing:
Slide bearing made of PVDF

Standard version

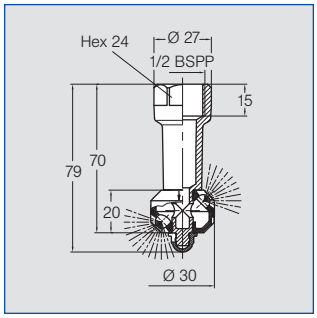

Spray angle	Ordering number Type	E Ø [mm]	Connection BSPP female	V̇ [l/min] p [bar] (p_{max} = 5 bar) 1	2	3	at 40 psi [US gal./min]	Max. tank diameter [m]
180°	**500.191.5E.02**	2.2	1/2"	9	13	16	4	0.8
180°	**500.191.5E.01**	2.2	1/2"	9	13	16	4	0.8
360°	**500.191.5E.00**	2.2	1/2"	14	20	24	6	1.1

E = Narrowest free cross-section

The maximum tank diameter shown above applies for the recommended operating pressure and is indicative only. The cleaning result is also affected by the type of soiling.

Compact version

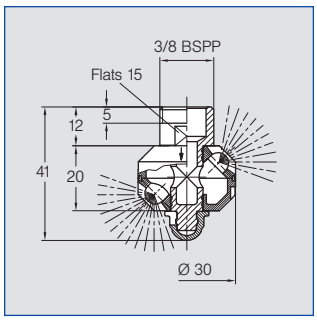

Spray angle	Ordering number Type	E Ø [mm]	Connection BSPP male	V̇ [l/min] p [bar] (p_{max} = 5 bar) 1	2	3	at 40 psi [US gal./min]	Max. tank diameter [m]
180°	**500.191.5E.21**	2.2	3/8"	9	13	16	4	0.8
360°	**500.191.5E.22**	2.2	3/8"	14	20	24	6	1.1

E = Narrowest free cross-section

The maximum tank diameter shown above applies for the recommended operating pressure and is indicative only. The cleaning result is also affected by the type of soiling.

Operation with compressed air only for short-term usage. Operation above the recommended operating pressure means higher wear and smaller droplets. This might have adverse effects on the cleaning result.

Rotating cleaning nozzle »HygienicWhirly«

Series 594 / 595

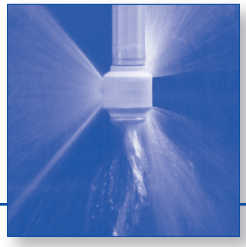

- EHEDG Version available
- Self rotating
- Effective flat jet nozzles
- Very good performance with foam usage

Materials:
Stainless steel AISI 316L, PEEK, EHEDG-Version: O-ring made of EPDM

Max. temperature:
100 °C, short-term up to 140 °C

Recommended operating pressure:
3 bar

Installation:
Operation in every direction is possible

Filtration:
Line strainer with a mesh size of 0.3 mm/50 mesh

Bearing:
Slide bearing made of PEEK

EHEDG version

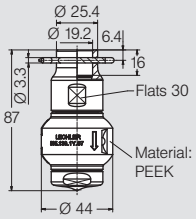

Slip-on connection ASME-BPE 1997 (OD-Tube) 595.139.1Y.67

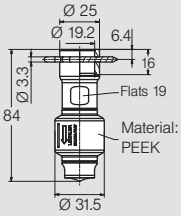

Slip-on connection ASME-BPE 1997 (OD-Tube) 594.XX9.1Y.67

Standard version

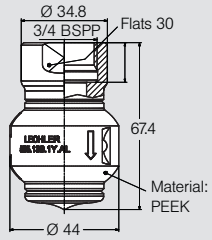

female tread 595.139.1Y.AL

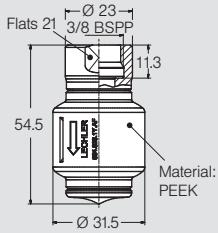

female tread 594.XX9.1Y.AF

Spray angle	Ordering number				E Ø [mm]	V̇ [l/min]					Max. tank diameter [m]
	Type	Connection				p [bar] (p_{max} = 5 bar)					
		3/8 BSPP* female	3/4 BSPP* female	3/4" Slip-on EHEDG version		0.5	1	2	3	at 40 psi [US gal./min]	
360°	**594.829.1Y**	**AF**	**-**	**67**	1.7	6	8	11	14	3	0.8
	594.879.1Y	**AF**	**-**	**67**	2.5	8	11	15	18	5	1.2
	595.009.1Y	**AF**	**-**	**67**	4.0	16	22	32	39	10	1.5
	595.049.1Y	**AF**	**-**	**67**	4.2	20	28	40	49	12	2.0
	595.139.1Y	**-**	**AL**	**67**	5.0	34	47	67	82	21	2.7

E = Narrowest free cross-section · *NPT on request

The maximum tank diameter shown above applies for the recommended operating pressure and is indicative only. The cleaning result is also affected by the type of soiling.

Slip-on information: - R-clip made of stainless steel AISI 316L is included (Ordering number: 095.022.1Y.50.94.E).
- Depending on diameter of the adapter the flow rate can increase due to leakage between connecting pipe and rotating cleaning nozzle.

Example of ordering:	Type	+	Connection	=	Ordering no.
	594.829.1Y	+	**AF**	=	**594.829.1Y.AF**

Rotating lance

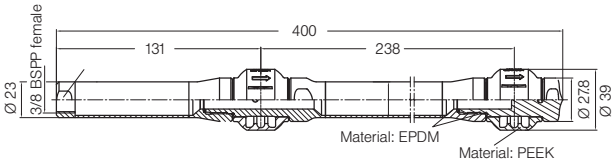

Available on request.

Rotating cleaning nozzle »MicroSpinner«

Series 5MC

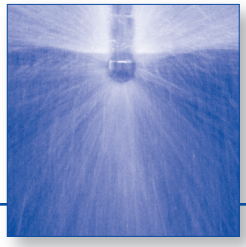

- Completely made of stainless steel
- Self rotating
- Efficient slot design
- Modern bearing construction

Materials:
Stainless steel AISI 316L,
Stainless steel AISI 440C

Max. temperature:
140 °C

Recommended operating pressure:
2 bar

Installation:
Operation in every direction is possible

Filtration:
Line strainer with a mesh size of 0.1 mm/170 mesh

Bearing:
Double ball bearing made of AISI 440C

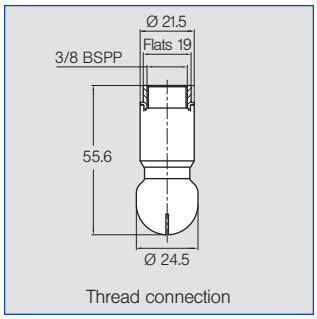

Thread connection

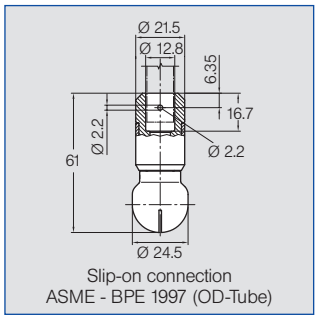

Slip-on connection
ASME - BPE 1997 (OD-Tube)

Spray angle	Ordering number			E Ø [mm]	$\dot{V}$ [l/min]				Max. tank diameter [m]
	Type	Connection*			p [bar] (p_{max} = 5 bar)				
		3/8 BSPP	1/2" Slip-on		1	2	3	at 40 psi [US gal./min]	
60°	**5MC.042.1Y**	**AF**	**TF05**	3.0	28	40	49	12	-
180°	**5MC.004.1Y**	**AF**	**TF05**	0.8	22	32	39	10	1.8
360°	**5MC.049.1Y**	**AF**	**TF05**	0.9	28	39	48	12	1.8

E = Narrowest free cross-section
*NPT, more slip-on sizes and weld-on versions on request

The maximum tank diameter shown above applies for the recommended operating pressure and is indicative only. The cleaning result is also affected by the type of soiling.

Operation with compressed air only for short-term usage. Operation above the recommended operating pressure means higher wear and smaller droplets. This might have adverse effects on the cleaning result.

Slip-on information: - R-clip made of stainless steel AISI 316L is included(Ordering no.: 095.013.1E.05.59).
- Depending on diameter of the adapter the flow rate can increase due to leakage between connecting pipe and rotating cleaning nozzle.

Example of ordering:	**Type**	**+**	**Connection**	**=**	**Ordering no.**
	5MC.042.1Y	**+**	**AF**	**=**	**5MC.042.1Y.AF**

Rotating cleaning nozzle »MiniSpinner«

Series 5MI

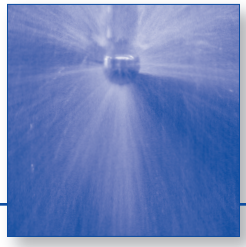

- Completely made of stainless steel
- Self rotating
- Efficient slot design
- Modern bearing construction

Materials:
Stainless steel AISI 316L,
Stainless steel AISI 440C

Max. temperature:
140 °C

Recommended operating pressure:
2 bar

Installation:
Operation in every direction is possible

Filtration:
Line strainer with a mesh size of 0.1 mm/170 mesh

Bearing:
Double ball bearing made of AISI 440C

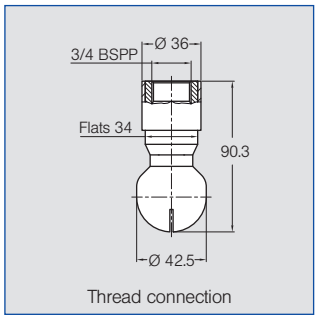

Thread connection

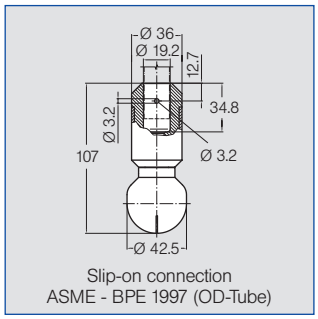

Slip-on connection
ASME - BPE 1997 (OD-Tube)

Spray angle	Ordering number				E Ø [mm]	V̇ [l/min]				Max. tank diameter [m]
	Type	Connection*				p [bar] (p_{max} = 5 bar)				
		1/2 BSPP	3/4 BSPP	3/4" Slip-on		1	2	3	at 40 psi [US gal./min]	
60°	**5MI.162.1Y**	**AH**	**-**	**TF07**	2.6	45	63	77	20	-
180°	**5MI.114.1Y**	**-**	**AL**	**TF07**	1.0	47	67	82	21	2.6
360°	**5MI.054.1Y**	**-**	**AL**	**TF07**	0.5	21	30	37	9	1.8
	5MI.074.1Y	**-**	**AL**	**TF07**	0.6	35	49	60	15	2.1
	5MI.014.1Y	**-**	**AL**	**TF07**	0.9	49	69	85	21	2.3
	5MI.209.1Y	**-**	**AL**	**TF07**	1.5	71	100	122	31	2.6

E = Narrowest free cross-section
*NPT, more slip-on sizes and weld-on versions on request

The maximum tank diameter shown above applies for the recommended operating pressure and is indicative only. The cleaning result is also affected by the type of soiling.

Operation with compressed air only for short-term usage. Operation above the recommended operating pressure means higher wear and smaller droplets. This might have adverse effects on the cleaning result.

Slip-on information: - R-clip made of stainless steel AISI 316L is included(Ordering no.: 095.022.1Y.50.60).
- Depending on diameter of the adapter the flow rate can increase due to leakage between connecting pipe and rotating cleaning nozzle.

Example of ordering:	Type	+	Connection	=	Ordering no.
	5MI.162.1Y	+	**AH**	=	**5MI.162.1Y.AH**

Rotating cleaning nozzle »Whirly«

Series 569

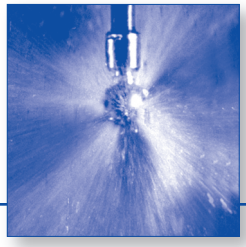

- Popular and proven design
- Powerful flat jets
- Wide range of flow rates

Materials:
Stainless steel AISI 316L,
PEEK, Rulon 641

Max. temperature:
140 °C

Recommended operating pressure:
2 bar

Installation:
Operation in every direction is possible; in horizontal installation position no rotating until 2 bar

Filtration:
Line strainer with a mesh size of 0.1 mm/170 mesh

Bearing:
Double ball bearing made of stainless steel

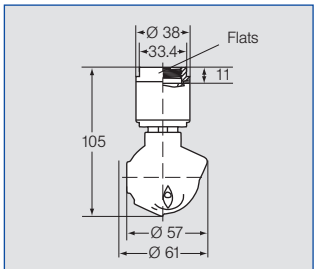

3/4 BSPP female thread

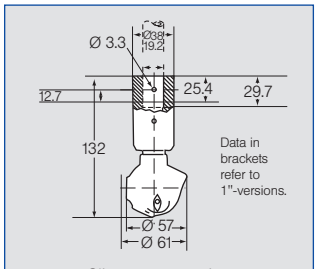

Slip-on connection
ASME - BPE 1997 (OD-Tube)

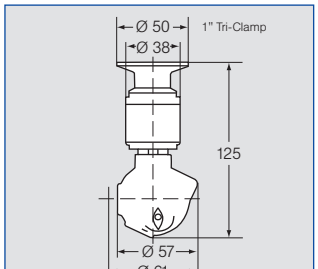

1" Tri-Clamp

Spray angle	Ordering number					E Ø [mm]	V̇ [l/min] p [bar] (p_{max} = 6 bar)				Max. tank diameter [m]
	Type	Connection									
		3/4 BSPP* female	3/4" Slip-on	1" Slip-on	1" Tri-Clamp		1	2	3	at 40 psi [US gal./min]	
270°	**569.055.1Y**	**AL**	**TF07**	**TF10**	**10**	3.6	36	48	62	15	1.8
	569.135.1Y	**AL**	**TF07**	**TF10**	**10**	4.8	52	71	87	22	2.1
	569.195.1Y	**AL**	**TF07**	**TF10**	**10**	5.6	69	97	119	30	2.6
270°	**569.056.1Y**	**AL**	**TF07**	**TF10**	**10**	3.6	36	48	62	15	1.8
	569.106.1Y	**AL**	**TF07**	**TF10**	**10**	4.8	41	58	71	18	2.1
	569.196.1Y	**AL**	**TF07**	**TF10**	**10**	5.6	69	97	119	30	2.6
360°	**569.059.1Y**	**AL**	**TF07**	**TF10**	**10**	3.2	36	48	62	15	1.8
	569.139.1Y	**AL**	**TF07**	**TF10**	**10**	3.6	52	71	87	22	2.1
	569.199.1Y	**AL**	**TF07**	**TF10**	**10**	4.8	69	97	119	30	2.6
	569.279.1Y	**AL**	**TF07**	**TF10**	**10**	7.1	103	145	178	45	3.0

E = Narrowest free cross-section · *NPT on request

ATEX version on request

The maximum tank diameter shown above applies for the recommended operating pressure and is indicative only. The cleaning result is also affected by the type of soiling.

Operation with compressed air only for short-term usage. Operation above the recommended operating pressure means higher wear and smaller droplets. This might have adverse effects on the cleaning result.

Slip-on information: - R-clip made of stainless steel AISI 316L is included (Ordering number: 095.022.1Y.50.60.E).
- Depending on diameter of the adapter the flow rate can increase due to leakage between connecting pipe and rotating cleaning nozzle.

Example of ordering:	Type	+	Connection	=	Ordering no.
	569.055.1Y.	**+**	**AL**	**=**	**569.055.1Y.AL**

Pop-up rotating cleaning nozzle »PopUp Whirly« Series 500.382

- For installation in the tank wall
- Cleaning with foam is possible
- Operation at low pressure is possible
- Self rotating

Materials:
Stainless steel AISI 316L, stainless steel AISI 301 (spring), PEEK (slide-bearing), EPDM (O-ring 500.382.1E.06)

Max. temperature:
140 °C

Recommended operating pressure:
2 bar, opening pressure approx. 0.8 bar

Installation:
Operation in every direction is possible

Filtration:
Line strainer with a mesh size of 0.3 mm/50 mesh

Bearing:
Slide bearing made of PEEK

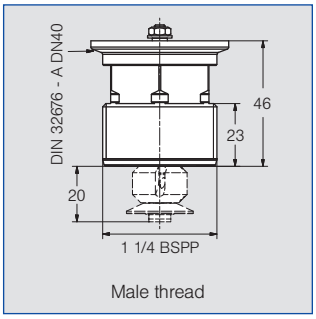

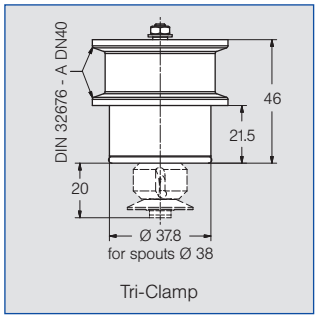

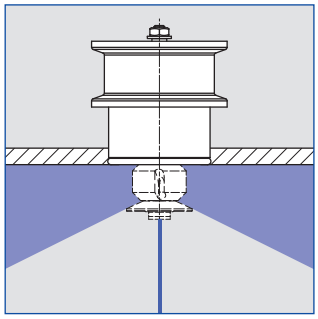

Spray angle	Ordering number	Tank connection		E Ø [mm]	Flow rate $\dot{V}$ [l/min]				Max. tank diameter [m]
					p [bar] (p_{max} = 6 bar)				
		1 1/4 BSPP	Tri-Clamp		1	2	3	at 40 psi [US gal./min]	
240°	**500.382.1E.02**	○	-	**1.1**	7.6	10.8	13.2	3.4	0.8
	500.382.1E.06	-	○	**1.1**	7.6	10.8	13.2	3.4	0.8

The maximum tank diameter shown above applies for the recommended operating pressure and is indicative only. The cleaning result is also affected by the type of soiling.

Operation with compressed air only for short-term usage. Operation above the recommended operating pressure means higher wear and smaller droplets. This might have adverse effects on the cleaning result.

Nozzle installation

Via thread in idle position

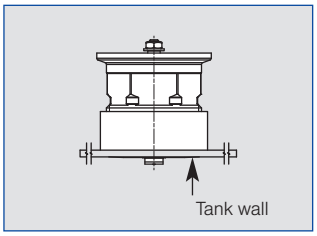

Via Tri-Clamp in operating position

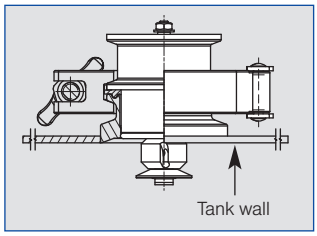

Pop-up rotating cleaning nozzle »PopUp Whirly« Series 500.453

- For installation in the tank wall
- Suitable for cleaning with foam
- Operation at low pressure is possible
- Self rotating

Materials:
Stainless steel AISI 316L, stainless steel AISI 301 (spring), PEEK (slide bearing), FKM (O-ring 500.453.1Y.00)

Max. temperature:
140 °C

Recommended operating pressure:
2 bar, opening pressure approx. 0.8 bar

Installation:
Operation in every direction is possible

Filtration:
Line strainer with a mesh size of 0.3 mm/50 mesh

Bearing:
Slide bearing made of PEEK

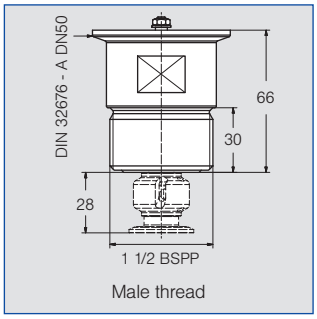

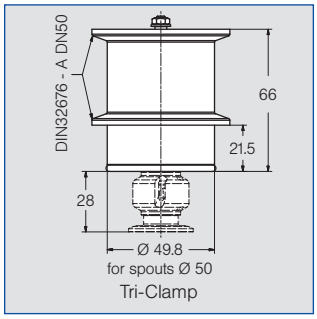

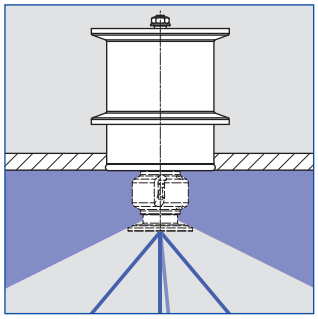

Spray angle	Ordering number	Tank connection		E Ø [mm]	Flow rate $\dot{V}$ [l/min]				Max. tank diameter [m]
					p [bar] (p_{max} = 6 bar)				
		1 1/4 BSPP	Tri-Clamp		1	2	3	at 40 psi [US gal./min]	
240°	**500.453.1Y.AR**	○	-	**1.2**	28.3	40	49	12.4	2.2
	500.453.1Y.00	-	○	**1.2**	28.3	40	49	12.4	2.2

The maximum tank diameter shown above applies for the recommended operating pressure and is indicative only. The cleaning result is also affected by the type of soiling.

Operation with compressed air only for short-term usage. Operation above the recommended operating pressure means higher wear and smaller droplets. This might have adverse effects on the cleaning result.

Nozzle installation

Via thread in idle position

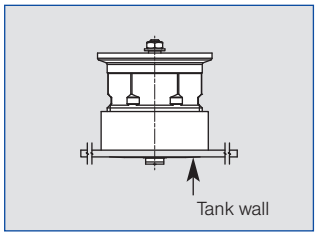

Via Tri-Clamp in operating position

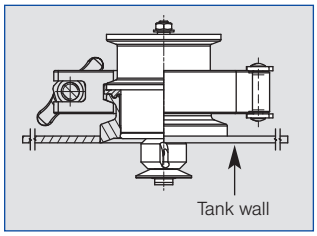

Rotating cleaning nozzle »Teflon® Whirly«

Series 573 / 583

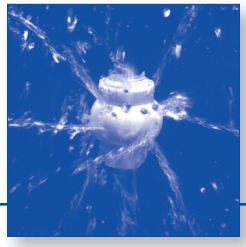

- Self rotating
- Rotating solid jets
- Recommended for tanks made of glass and enamel
- 3A® version available

Material:
PTFE (Teflon®)

Max. temperature:
95 °C
(Versions for use with higher temperature on request)

Recommended operating pressure:
2 bar

Installation:
Operation in every direction is possible

Filtration:
Line strainer with a mesh size of 0.3 mm/50 mesh

Bearing:
Slide bearing made of PTFE

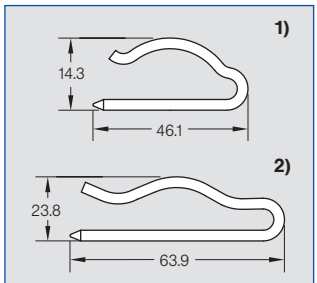

R-clip

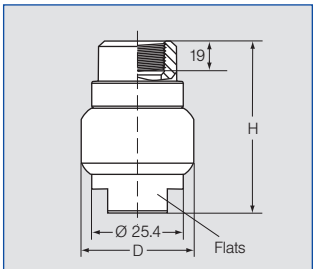

BSPP female thread*

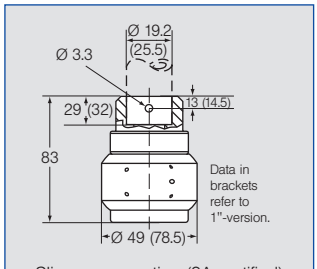

Slip-on connection (3A-certified)
SME - BPE 1997 (OD-Tube)

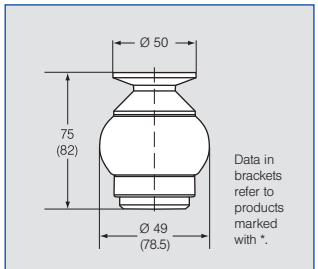

1 1/2" Tri-Clamp

Spray angle	R-clip	Ordering number: Type	Connection: 3/4 BSPP	1 BSPP	3/4" Slip-on	1" Slip-on	1 1/2" Tri-Clamp	E Ø [mm]	V̇ [l/min] p [bar] (p_{max} = 6 bar): 1	2	3	at 40 psi [US gal./min]	Dimmensions for female thread version: Height H [mm]	Diameter D [mm]	Max. tank diameter [m]
180°	1)	**583.114.55**	**AL**	**-**	**TF07**	**TF10**	**15**	2.1	47	67	82	21	74	49	2.5
	1)	**583.264.55**	**AL**	**-**	**TF07**	**TF10**	**15**	3.3	103	145	178	45	74	49	2.8
	2)	**583.344.55**	**-**	**AN**	**-**	**TF10**	**15***	7.1	159	225	276	70	100	78.5	3.2
180°	1)	**573.114.55**	**AL**	**-**	**TF07**	**TF10**	**15**	2.1	47	67	82	21	74	49	2.5
	1)	**573.264.55**	**AL**	**-**	**TF07**	**TF10**	**15**	3.3	103	145	178	45	74	49	2.8
	2)	**573.344.55**	**-**	**AN**	**-**	**TF10**	**15***	7.1	159	225	276	70	100	78.5	3.2
270°	1)	**583.116.55**	**AL**	**-**	**TF07**	**TF10**	**15**	2.4	47	67	82	21	74	49	2.5
	1)	**583.266.55**	**AL**	**-**	**TF07**	**TF10**	**15**	3.4	103	145	178	45	74	49	2.8
	2)	**583.346.55**	**-**	**AN**	**-**	**TF10**	**15***	5.9	159	225	276	70	100	78.5	3.2
270°	1)	**573.116.55**	**AL**	**-**	**TF07**	**TF10**	**15**	2.4	47	67	82	21	74	49	2.5
	1)	**573.266.55**	**AL**	**-**	**TF07**	**TF10**	**15**	3.4	103	145	178	45	74	49	2.8
	2)	**573.346.55**	**-**	**AN**	**-**	**TF10**	**15***	5.9	159	225	276	70	100	78.5	3.2
360°	1)	**583.119.55**	**AL**	**-**	**TF07**	**TF10**	**15**	1.8	47	67	82	21	74	49	2.4
	1)	**583.209.55**	**AL**	**-**	**TF07**	**TF10**	**15**	3.5	71	100	122	31	74	49	2.5
	1)	**583.269.55**	**AL**	**-**	**TF07**	**TF10**	**15**	4.8	103	145	178	45	74	49	2.8
	2)	**583.279.55**	**-**	**AN**	**-**	**TF10**	**15***	3.7	106	150	184	47	100	78.5	3.0
	2)	**583.349.55**	**-**	**AN**	**-**	**TF10**	**15***	5.6	159	225	276	70	100	78.5	3.2

E = Narrowest free cross-section · *NPT on request

The maximum tank diameter shown above applies for the recommended operating pressure and is indicative only. The cleaning result is also affected by the type of soiling.

Operation with compressed air only for short-term usage. Operation above the recommended operating pressure means higher wear and smaller droplets. This might have adverse effects on the cleaning result.
Teflon® is a registered trademark of E.I.Dupont De Nemours and Company.

Slip-on information:
- R-clip made of stainless steel AISI 316L is included (Ordering number: R-clip 1: 095.022.1Y.50.88.E, R-clip 2: 095.022.1Y.50.60.E).
- Depending on diameter of the adapter the flow rate can increase due to leakage between connecting pipe and rotating cleaning nozzle.

Example of ordering:	Type	+	Connection	=	Ordering no.
	583.114.55.	+	AL	=	583.114.55.AL

Rotating cleaning nozzles »Gyro«

Series 577 / 579

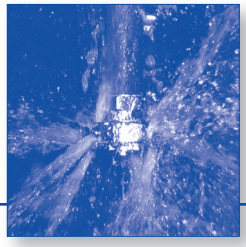

- Self rotating
- Effective flat jet nozzles
- Large free cross sections, less prone to clogging

Materials:
Stainless steel AISI 316Ti, PTFE

Max. temperature:
90 °C

Recommended operating pressure:
3 bar

Installation:
Vertically facing downward

Filtration:
Line strainer with a mesh size of 0.3 mm/50 mesh

Bearing:
Slide bearing made of PTFE

Accessories:
Spare parts set consisting of: top seal, bottom seal, bolt, nut, sleeve, instructions for use

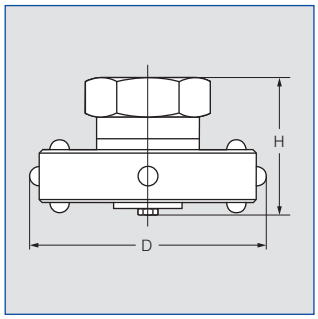

Spray angle	Ordering number: Type	Connection: NPT 1"	Connection: NPT 2"	Connection: NPT 3"	V̇ [l/min] p [bar] (p_{max} = 5 bar): 1	2	3	5	at 40 psi [US gal/min]	Dimensions: Height H [mm]	Diameter D [mm]
180°	**577. 283. 17**	**BN**	**-**	**-**	115	163	200	258	50	68	118
	577. 363. 17	**BN**	**-**	**-**	182	258	316	408	80	68	118
	577. 404. 17	**-**	**BW**	**-**	228	322	394	509	100	103	151
	577. 434. 17	**-**	**BW**	**-**	273	386	473	610	120	103	151
	577. 524. 17	**-**	**BW**	**-**	452	639	783	1010	170	103	151
	577. 564. 17	**-**	**-**	**MB**	564	798	977	1262	250	116	188
	577. 594. 17	**-**	**-**	**MB**	677	958	1173	1515	300	116	188
	577. 614. 17	**-**	**-**	**MB**	791	1118	1369	1768	350	116	188
180°	**579. 284. 17**	**BN**	**-**	**-**	115	163	200	258	50	68	118
	579. 364. 17	**BN**	**-**	**-**	182	258	316	408	80	68	118
	579. 404. 17	**-**	**BW**	**-**	228	322	394	509	100	103	151
	579. 434. 17	**-**	**BW**	**-**	273	386	473	610	120	103	151
	579. 494. 17	**-**	**BW**	**-**	380	538	659	851	170	103	151
	579. 564. 17	**-**	**-**	**MB**	564	798	977	1262	250	116	188
	579. 594. 17	**-**	**-**	**MB**	677	958	1173	1515	300	116	188
	579. 614. 17	**-**	**-**	**MB**	791	1118	1369	1768	350	116	188
270°	**577. 285. 17**	**BN**	**-**	**-**	115	163	200	258	50	68	118
	577. 365. 17	**BN**	**-**	**-**	182	258	316	408	80	68	118
	577. 405. 17	**-**	**BW**	**-**	228	322	394	509	100	103	151
	577. 435. 17	**-**	**BW**	**-**	273	386	473	610	120	103	151
	577. 495. 17	**-**	**BW**	**-**	380	538	659	851	170	103	151
	577. 566. 17	**-**	**-**	**MB**	564	798	977	1262	250	116	188
	577. 596. 17	**-**	**-**	**MB**	677	958	1173	1515	300	116	188
	577. 616. 17	**-**	**-**	**MB**	791	1118	1369	1768	350	116	188
360°	**577. 289. 17**	**BN**	**-**	**-**	115	163	200	258	50	68	118
	577. 369. 17	**BN**	**-**	**-**	182	258	316	408	80	68	118
	577. 409. 17	**-**	**BW**	**-**	228	322	394	509	100	103	151
	577. 439. 17	**-**	**BW**	**-**	273	386	473	610	120	103	151
	577. 499. 17	**-**	**BW**	**-**	380	538	659	851	170	103	151
	577. 569. 17	**-**	**-**	**MB**	570	806	987	1274	250	116	188
	577. 599. 17	**-**	**-**	**MB**	685	969	1187	1532	300	116	188
	577. 619. 17	**-**	**-**	**MB**	798	1128	1382	1784	350	116	188

The maximum tank diameter shown above applies for the recommended operating pressure and is indicative only. The cleaning result is also affected by the type of soiling.

Operation with compressed air only for short-term usage. Operation above the recommended operating pressure means higher wear and smaller droplets. This might have adverse effects on the cleaning result.

Example of ordering:	Type	+	Connection	=	Ordering no.
	577. 283. 17.	+	**BN**	=	**577. 283. 17. BN**

Rotating cleaning nozzle »XactClean®«

Series 5W2 / 5W3

NEW!

- Controlled rotation
- Powerful flat jet nozzles
- Very efficient tank cleaning nozzle

Materials:
Stainless steel AISI 316L and PTFE

Max. temperature:
80 °C

Recommended operating pressure:
5 bar

Installation:
Operation in every direction is possible

Filtration:
Line strainer with a mesh size of 0.1 mm/170 mesh

Bearing:
Slide bearing made of PTFE

Rotation monitoring sensor:
Sensor compatible
Info: see page 33

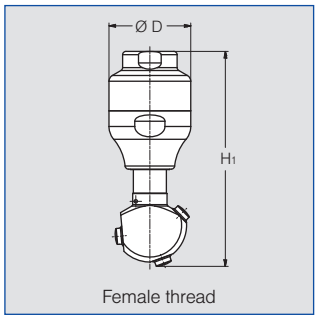

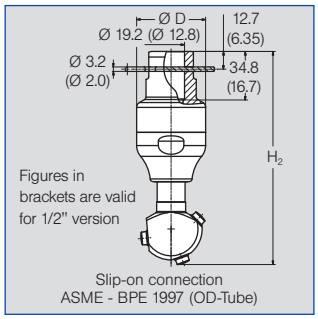

Nozzle dimensions [mm]

Type	H_1 (Thread version)	H_2 (Slip-on)	Ø D
5W2.87X	114	118	43
5W2.99X	114	118	43
5W3.06X	114	136	43
5W3.14X	146	167	60
5W3.20X	146	167	60
5W3.25X	146	167	60

Spray angle	Ordering number: Type	Connection: 3/8 BSPP* female	1/2 BSPP* female	3/4 BSPP* female	1 BSPP* female	1/2" Slip-on	3/4" Slip-on	E Ø [mm]	V̇ [l/min] p [bar] (p_{max} = 20 bar): 2	5	10	at 40 psi [US gal./min]	Max. tank diameter [m]
270°	**5W2.875.1Y**	**AF**	**AH**	**-**	**-**	**TF05**	**-**	1.7	15	24	34	4.7	3.5
	5W2.995.1Y	**-**	**AH**	**-**	**-**	**TF05**	**-**	2.2	30	47	67	9.3	4.0
	5W3.065.1Y	**-**	**AH**	**AL**	**-**	**-**	**TF07**	2.2	42	66	94	13.0	6.0
	5W3.145.1Y	**-**	**-**	**AL**	**-**	**-**	**TF07**	3.8	70	111	157	21.7	7.0
	5W3.205.1Y	**-**	**-**	**AL**	**-**	**-**	**TF07**	4.8	100	158	224	31.0	7.5
	5W3.255.1Y	**-**	**-**	**AL**	**AN**	**-**	**TF07**	5.5	130	206	291	40.3	8.0
270°	**5W2.876.1Y**	**AF**	**AH**	**-**	**-**	**TF05**	**-**	1.7	15	24	34	4.7	3.5
	5W2.996.1Y	**-**	**AH**	**-**	**-**	**TF05**	**-**	2.2	30	47	67	9.3	4.0
	5W3.066.1Y	**-**	**AH**	**AL**	**-**	**-**	**TF07**	2.2	42	66	94	13.0	6.0
	5W3.146.1Y	**-**	**-**	**AL**	**-**	**-**	**TF07**	3.8	70	111	157	21.7	7.0
	5W3.206.1Y	**-**	**-**	**AL**	**-**	**-**	**TF07**	4.8	100	158	224	31.0	7.5
	5W3.256.1Y	**-**	**-**	**AL**	**AN**	**-**	**TF07**	5.5	130	206	291	40.3	8.0
360°	**5W2.879.1Y**	**AF**	**AH**	**-**	**-**	**TF05**	**-**	1.52	15	24	34	4.7	3.5
	5W2.999.1Y	**-**	**AH**	**-**	**-**	**TF05**	**-**	2.0	30	47	67	9.3	4.0
	5W3.069.1Y	**-**	**AH**	**AL**	**-**	**-**	**TF07**	2.0	42	66	94	13.0	6.0
	5W3.149.1Y	**-**	**-**	**AL**	**-**	**-**	**TF07**	3.5	70	111	157	21.7	7.0
	5W3.209.1Y	**-**	**-**	**AL**	**-**	**-**	**TF07**	4.4	100	158	224	31.0	7.5
	5W3.259.1Y	**-**	**-**	**AL**	**AN**	**-**	**TF07**	5.0	130	206	291	40.3	8.0

E = Narrowest free cross-section. · * NPT on request

The maximum tank diameter shown above applies for the recommended operating pressure and is indicative only. The cleaning result is also affected by the type of soiling.

Operation with compressed air only for short-term usage. Operation above the recommended operating pressure meanshigher wear and smaller droplets. This might have adverse effects on the cleaning result.

Slip-on information:
- R-clip made of stainless steel AISI 316L is included (Ordering number: 095.022.1Y.50.60.E (5W3), 095.013.1E.05.59.0 (5W2)).
- Depending on diameter of the adapter the flow rate can increase due to leakage between connecting pipe and rotating cleaning nozzle.

High impact tank cleaning machine »IntenseClean Hygienic« Series 5TA

NEW!

- Gear-controlled
- Particularly powerful solid jets
- Operating pressures up to 15 bar possible

Materials:
Stainless steel AISI 316L, PEEK, PTFE, Zirconium oxide, EPDM

Max. temperature:
95 °C

Recommended operating pressure:
5 bar

Installation:
Operation in every direction possible

Filtration:
Line strainer with a mesh size of 0.2 mm/80 mesh

Bearing:
Ball bearing

Weight:
0.9 kg

Rotation monitoring sensor:
Sensor compatible,
Info: see page 33

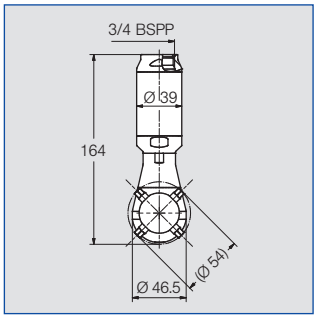

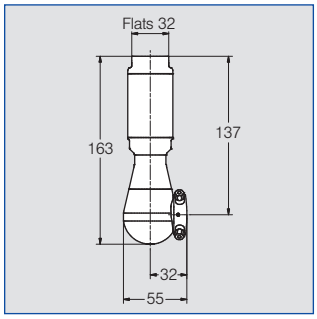

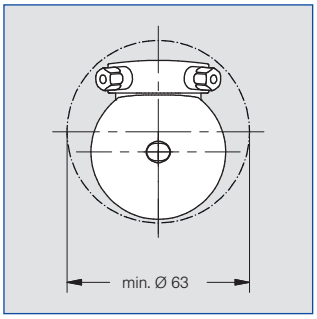

Spray angle	Ordering number / Type	E Ø [mm]	Number, Ø nozzles [mm]	V̇ [l/min] p [bar] (p_{max} = 15 bar) 2	5	10	40 psi [US gal./min]	Max. tank-diameter [m]
360°	**5TA.403.1Y.AL**	1.5	4 x 3.0	25	40	56	7.8	12.0
	5TA.404.1Y.AL	1.5	4 x 4.0	42	66	93	12.9	12.5
	5TA.405.1Y.AL	1.5	4 x 5.0	50	79	112	15.5	13.0

E = Narrowest free cross-section

The maximum tank diameter shown above applies for the recommended operating pressure and is indicative only. The cleaning result is also affected by the type of soiling.

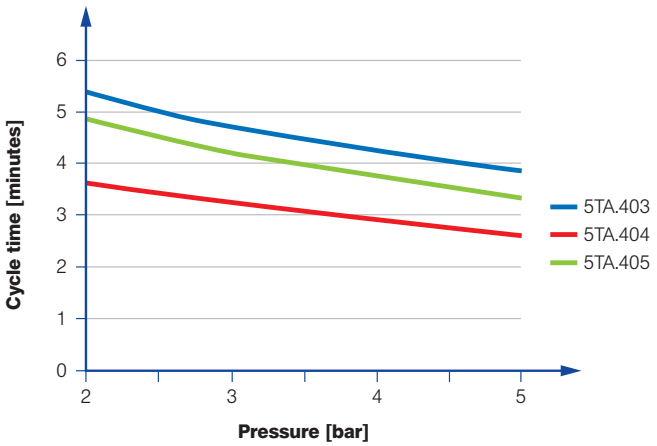

Cycle time depending on pressure of series 5TA

High impact tank cleaning machine »IntenseClean Hygienic« Series 5TB

NEW!

- Gear-controlled
- Particularly powerful solid jets
- Operating pressures up to 25 bar possible

Materials:
Stainless steel AISI 316L, PEEK, PTFE, Zirconium oxide, EPDM

Max. temperature:
95 °C

Recommended operating pressure:
5 bar

Installation:
Operation in every direction possible

Filtration:
Line strainer with a mesh size of 0.2 mm/80 mesh

Bearing:
Ball bearing

Weight:
4.0 kg

Rotation monitoring sensor:
Sensor compatible,
Info: see page 33

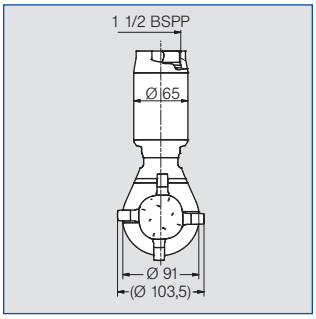

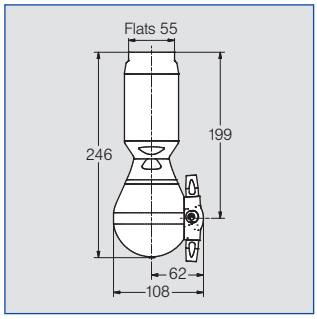

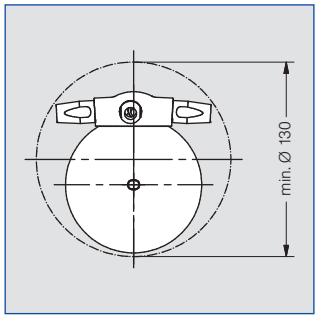

Spray angle	Ordering number / Type	E Ø [mm]	Number, Ø nozzles [mm]	V̇ [l/min] p [bar] (p_{max} = 25 bar) 2	5	10	40 psi [US gal./min]	Max. tank-diameter [m]
360°	**5TB.406.1Y.AS**	6.0	4 x 6.0	107	169	239	33.1	14.0
	5TB.407.1Y.AS	6.0	4 x 7.0	135	213	302	41.9	14.0
	5TB.408.1Y.AS	6.0	4 x 8.0	165	261	369	51.2	15.0

E = Narrowest free cross-section

The maximum tank diameter shown above applies for the recommended operating pressure and is indicative only. The cleaning result is also affected by the type of soiling.

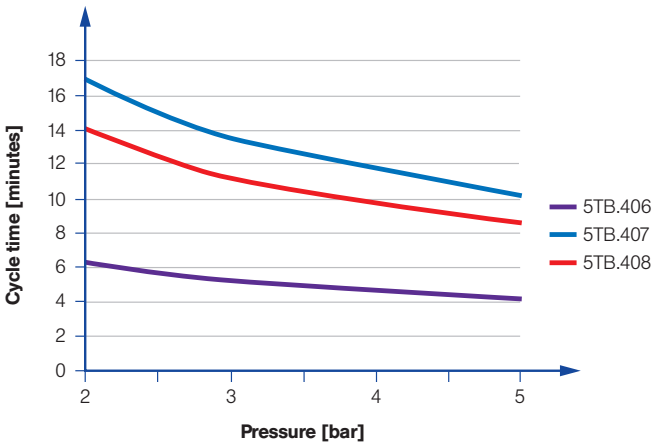

Cycle time depending on pressure of series 5TB

High impact tank cleaning machine »IntenseClean« Series 5TM

- Gear driven
- Very powerful solid jets
- Popular and proven design

Materials:
Stainless steel AISI 316L, PTFE, carbon fibre

Max. temperature:
60 °C
(Version for higher temperatures on request)

Recommended operating pressure:
5 bar

Installation:
Operation in every direction is possible

Filtration:
Line strainer with a mesh size of 0.2 mm/80 mesh

Bearing:
Ball bearing

Weight:
7.5 kg

Rotation monitoring sensor:
Sensor compatible,
Info: see page 33

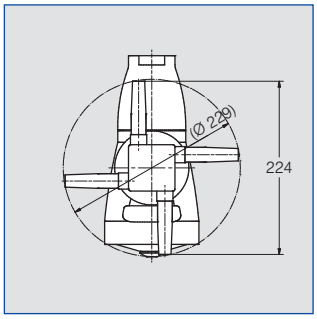

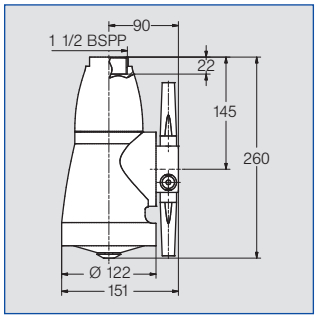

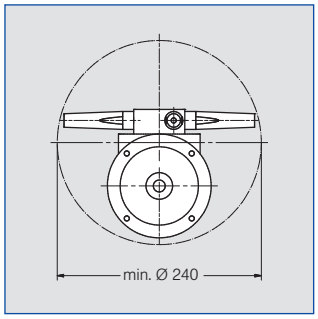

Spray angle	Ordering number	E Ø [mm]	Number, Ø Nozzle [mm]	V̇ [l/min] p [bar] (p_{max} = 7 bar) 2	3	5	at 40 psi [US gal./min]	Max. tank diameter [m]
360°	**5TM.208.1Y.AS**	8	2 x 8.0	125	153	198	39	24.0
	5TM.210.1Y.AS	10	2 x 10.0	160	196	253	50	24.0
	5TM.406.1Y.AS	6	4 x 6.0	140	171	221	43	18.0
	5TM.407.1Y.AS	7	4 x 7.0	170	208	269	53	20.0
	5TM.408.1Y.AS	8	4 x 8.0	200	245	316	62	22.0
	5TM.410.1Y.AS	10	4 x 10.0	260	318	411	81	23.0

E = Narrowest free cross-section

The maximum tank diameter shown above applies for the recommended operating pressure and is indicative only. The cleaning result is also affected by the type of soiling.

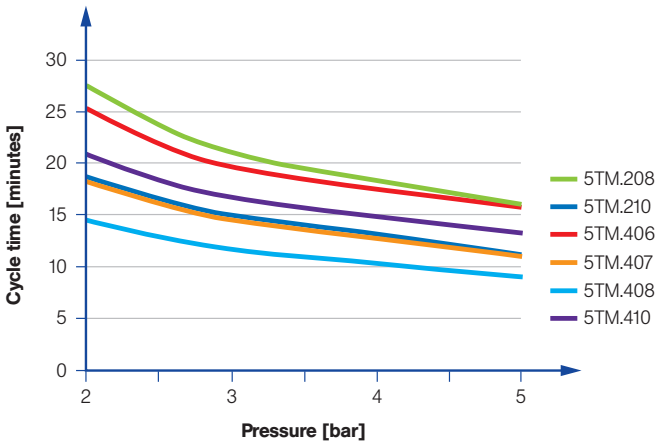

Cycle time depending on pressure of series 5TM

Rotation Monitoring Sensor

Cleaning processes can be easily and reliably monitored with the Lechler rotation monitoring sensor. The sensor records the quantity of liquid flowing over the sensor tip. With the aid of the supplied software, the sensor function can be specifically adjusted to the tank size, pressure and nozzle.

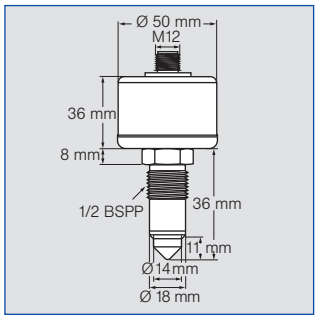

Electrical data
- Supply voltage: Ub = 24 V +/-20% (18 up to 32 VDC)
- Power requirements: < 20 mA
- Output signal: PNP, 50 mA short circuit protected, active

Operating conditions
- Ambient temperature: -10° up to +60°C
- Process temperature: 0° up to +100°C

Materials
- Socket (1/2 BSPP): AISI 316L
- Probe tip: PEEK
- Body: AISI 303

Advantages
- Reliable recognition of any faults during the cleaning cycle
- The process connection of the sensor is in compliance with the hygiene guidelines of the EHEDG
- Simple operation
- Can be connected to PLC
- Only needs to be set up once using the software provided
- Can be specifically adapted to each cleaning task

Ordering data	Ordering no.
Rotation monitoring sensor with weld-in sleeve	050.040.00.00.00.0
Cable set for first-time operation	050.040.00.00.01.0

Static spray balls

Series 527

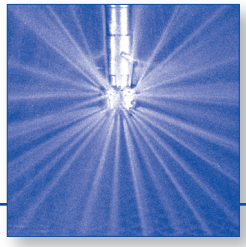

- Effective solid jets
- 3A® certification

Material:
Stainless steel AISI 316L

Max. temperature:
200 °C

Recommended operating pressure:
1.5 bar

Installation:
Operation in every direction is possible

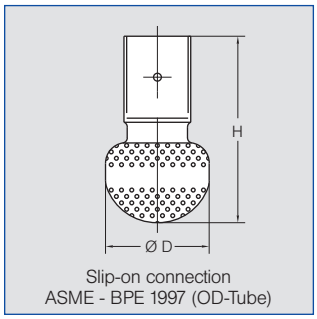

Slip-on connection
ASME - BPE 1997 (OD-Tube)

Spray angle	Ordering number Type	E Ø mm	V̇ [l/min] p [bar] (p_{max} = 5 bar) 1	2	3	5	at 40 psi [US gal./min]	Height H [mm]	Diameter D [mm]	For outer pipe diameter [mm]	[in]	Max. tank diameter [m]
360°	**527.209.1Y.00.75**	0.8	42	60	73	95	19	68	32	19.05	3/4"	5.2
	527.289.1Y.01.50	1.1	120	170	208	269	50	116	65	38.1	1 1/2"	6.0
	527.449.1Y.02.00	1.7	297	420	514	664	127	152	102	50.8	2"	8.2

E = Narrowest free cross-section

The maximum tank diameter shown above applies for the recommended operating pressure and is indicative only. The cleaning result is also affected by the type of soiling.

Slip-on information: - R-clip made of stainless steel AISI 316L is included.
- Depending on diameter of the adapter the flow rate can increase due to leakage between connecting pipe and static spray ball.

In most applications, static spray balls do not deliver the same cleaning power as rotating nozzles, anyway they do have advantages that make them indispensable for certain tasks:

- No moving parts
- Self-draining
- Easy to inspect
- Proven use in hygienically sensitive environments

Should a rotating nozzle stop turning for some reason, parts of the tank may remain uncleaned. This cannot happen with spray balls. However, gaps can occur in the spray pattern if individual openings are blocked with soil.

Compared to rotating nozzles, static spray balls usually need two to three times the amount of liquid.

Static spray balls

Series 591

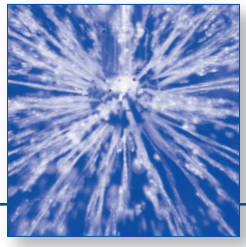

- Popular spray ball design
- Effective solid jets

Material:
Stainless steel AISI 316Ti
Pin: Stainless steel AISI 316L

Other materials (316L and PTFE) on request.

Max. temperature:
200 °C

Recommended operating pressure:
3 bar

Installation:
Operation in every direction is possible

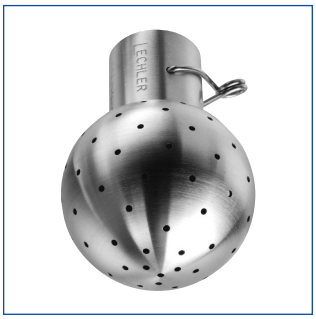

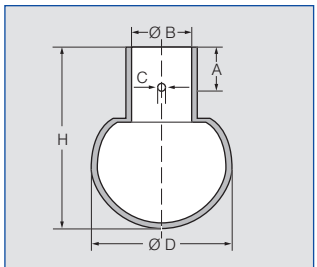

Slip-on connection
DIN 11850, row 1

Spray angle ∢	Ordering number Type	E Ø [mm]	V̇ [l/min] p [bar] (p_{max} = 5 bar) 0.5	1.0	2.0	3.0	at 40 psi [US gal./min]	Dimensions approx. [mm] Diameter D	Height H	Connection B	Slip-on	C	A	Max. tank diameter [m]
360°	**591.M11.17.00**	0.8	7	10	14	17	4	20	32.5	8.2	DN8	2.2	9.0	2.8
	591.X11.17.00	1.2	25	35	49	61	15	24	37.5	12.2	DN10	2.2	9.0	2.2
	591.Y11.17.00	1.2	49	70	99	121	31	30	42	18.2	DN15	2.2	9.0	2.5
	591.A21.17.00	2.0	91	128	181	222	56	40	53	22.2	DN20	2.5	9.0	3.5
	591.B31.17.00	2.1	130	183	259	318	80	64	90	28.2	DN25	2.8	18.0	5.2
	591.B51.17.00	3.0	206	292	412	505	128	64	90	28.2	DN25	2.8	18.0	5.4
180°	**591.A23.17.00**	2.0	74	105	148	182	46	40	53	22.2	DN20	2.5	9.0	2.5
	591.B53.17.00	3.0	146	207	292	358	91	64	90	28.2	DN25	2.8	18.0	4.6
180°	**591.B32.17.00**	2.1	103	145	205	251	64	64	90	28.2	DN25	2.8	18.0	5.2
	591.D42.17.00	2.2	230	325	460	563	142	90	122	52.3	DN50	3.3	25.0	5.5

E = Narrowest free cross-section
Female thread and more slip-on sizes on request

The maximum tank diameter shown above applies for the recommended operating pressure and is indicative only. The cleaning result is also affected by the type of soiling.

Slip-on information: - R-clip made of stainless steel AISI 316L or similar is included.
- Depending on diameter of the adapter the flow rate can increase due to leakage between connecting pipe and static spray ball.

In most applications, static spray balls do not deliver the same cleaning power as rotating nozzles, anyway they do have advantages that make them indispensable for certain tasks:

- No moving parts
- Self-draining
- Easy to inspect
- Proven use in hygienically sensitive environments

Should a rotating nozzle stop turning for some reason, parts of the tank may remain uncleaned. This cannot happen with spray balls. However, gaps can occur in the spray pattern if individual openings are blocked with soil.

Compared to rotating nozzles, static spray balls usually need two to three times the amount of liquid.

Pneumatic atomizing nozzles, Full cone, pressure principle, internal mixing Series 136.1

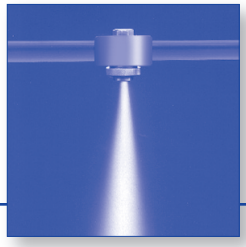

Fine full cone atomization and fogging with air or gas. Liquid pressure principle. Internal mixing of fluids.
Applications:
Humidification of air, cooling, disinfection (e.g. bottles), coating, dosing, release agent applications.

Series 136.1

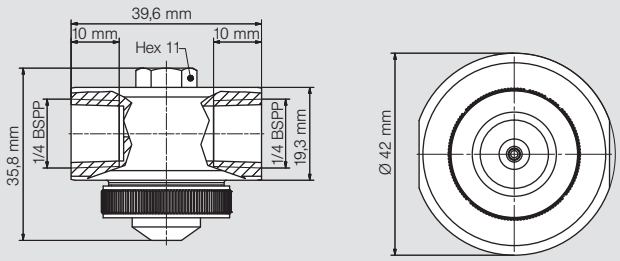

Weight brass: 200 g

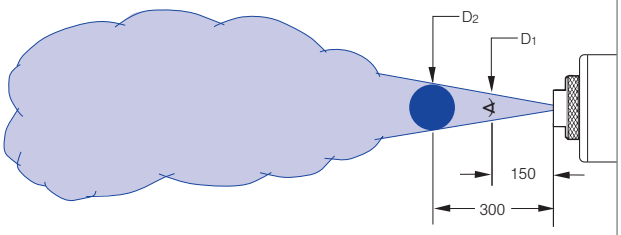

Series 136.1

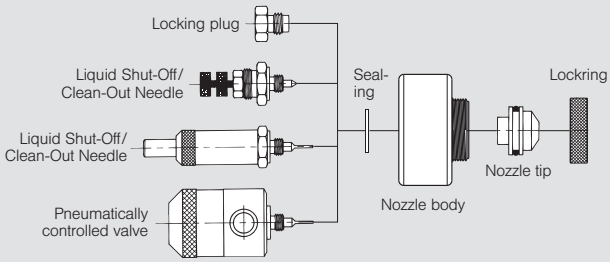

Accessories for series 136 please refer to page 41/42

Spray angle	Ordering no. Type	Mat. no. 1Y AISI 316L	Mat. no. 35 Brass plated	E Ø [mm]	Liquid pressure **p** [bar] 0.7 p Air [bar]	0.7 V̇ Water [l/h]	0.7 V̇n Air [m³/h]	1.5 p Air [bar]	1.5 V̇ Water [l/h]	1.5 V̇n Air [m³/h]	3.0 p Air [bar]	3.0 V̇ Water [l/h]	3.0 V̇n Air [m³/h]	4.0 p Air [bar]	4.0 V̇ Water [l/h]	4.0 V̇n Air [m³/h]	Spray dimensions p Air [bar]	p Water [bar]	D1 [mm]	D2 [mm]
20°	136. 115. xx. A2	○	○	0.50	0.40	5.90	0.30	1.40	5.80	0.80	2.40	9.10	1.10	3.00	11.00	1.20	0.80	0.70	60	100
					0.80	3.80	0.60	1.80	4.10	1.00	2.80	7.50	1.20	3.40	9.60	1.40	1.80	1.50	60	95
					1.20	1.70	0.90	2.20	2.20	1.40	3.20	5.90	1.50	3.80	8.20	1.60	2.60	2.00	60	100
					-	-	-	2.60	1.20	1.70	3.60	4.40	1.80	4.20	6.80	1.90	3.20	3.00	55	95
					-	-	-	-	-	-	4.00	2.90	2.10	4.60	5.50	2.20	4.40	4.00	55	100
					-	-	-	-	-	-	4.40	2.00	2.50	5.00	4.10	2.50				
					-	-	-	-	-	-	4.80	1.10	2.80	5.40	2.90	2.80				
					-	-	-	-	-	-	5.20	0.40	3.00	5.80	2.10	3.10				
	136. 125. xx. A2	○	○	0.50	0.80	4.70	1.50	1.20	7.00	1.80	2.80	9.10	3.30	3.40	10.60	3.90	1.40	0.70	55	90
					1.20	4.40	1.90	1.60	6.60	2.20	3.20	8.70	3.70	3.80	10.30	4.30	2.20	1.50	55	95
					1.60	4.00	2.30	2.00	6.20	2.60	3.60	8.40	4.10	4.20	9.90	4.60	2.80	2.00	55	100
					2.00	3.50	2.60	2.40	5.80	3.00	4.00	8.00	4.50	4.60	9.60	5.00	3.40	3.00	60	100
					2.40	3.00	3.00	2.80	5.40	3.40	4.40	7.70	4.80	5.00	9.30	5.40	4.20	4.00	60	100
					2.80	2.70	3.20	3.20	4.90	3.70	4.80	7.30	5.20	5.40	8.90	5.80				
					3.20	2.00	3.70	3.60	4.40	4.10	5.20	7.00	5.60	5.80	8.60	6.10				
					3.60	1.60	4.10	4.00	3.90	4.50	5.60	6.60	5.90	-	-	-				
					4.00	1.30	4.50	4.40	3.50	4.80	6.00	6.20	6.30	-	-	-				
					4.40	1.00	4.90	4.80	3.10	5.20	-	-	-	-	-	-				
					4.80	0.60	5.20	5.20	2.70	5.60	-	-	-	-	-	-				
					-	-	-	5.60	2.30	5.90	-	-	-	-	-	-				
					-	-	-	6.00	1.90	6.30	-	-	-	-	-	-				

E = narrowest free cross section (water)

Continued on next page.

Example for ordering:	Type	+	Material no. (xx)	=	Ordering no.
	136. 115. xx. A2	+	1Y	=	136. 115. 1Y. A2

Pneumatic atomizing nozzles, Full cone, pressure principle, internal mixing Series 136.1

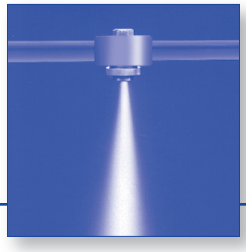

Spray angle	Ordering no. Type	Mat. no. 1Y AISI 316L	Mat. no. 35 Brass plated	E Ø [mm]	Liquid pressure p [bar] 0.7 p Air [bar]	0.7 V̇ Water [l/h]	0.7 V̇n Air [m³/h]	1.5 p Air [bar]	1.5 V̇ Water [l/h]	1.5 V̇n Air [m³/h]	3.0 p Air [bar]	3.0 V̇ Water [l/h]	3.0 V̇n Air [m³/h]	4.0 p Air [bar]	4.0 V̇ Water [l/h]	4.0 V̇n Air [m³/h]	Spray dimensions p Air [bar]	p Water [bar]	D_1 [mm]	D_2 [mm]
20°	136. 134. xx. A2	○	○	0.7	1.20	13.20	2.70	2.00	19.40	3.90	3.00	28.30	5.20	3.80	32.60	6.20	1.80	0.70	55	95
					1.60	12.40	3.30	2.40	18.10	4.40	3.40	27.50	5.70	4.20	32.00	6.80	2.80	1.50	60	105
					2.00	11.80	3.90	2.80	17.30	4.90	3.80	26.70	6.30	4.60	31.30	7.30	3.80	2.00	60	105
					2.40	11.40	4.40	3.20	16.70	5.50	4.20	25.90	6.80	5.00	30.60	7.80	5.20	3.00	65	110
					2.80	11.10	4.90	3.60	16.10	6.00	4.60	25.00	7.30	5.40	29.90	8.40	6.00	4.00	65	110
					3.20	10.80	5.50	4.00	15.60	6.50	5.00	24.20	7.80	5.80	29.30	8.90				
					3.60	10.60	6.00	4.40	15.20	7.00	5.40	23.60	8.40	-	-	-				
					4.00	10.40	6.50	4.80	15.00	7.60	5.80	23.10	8.90	-	-	-				
					4.40	10.10	7.00	5.20	14.60	8.10	-	-	-	-	-	-				
					4.80	9.90	7.60	5.60	14.10	8.60	-	-	-	-	-	-				
					5.20	9.50	8.10	6.00	13.80	9.10	-	-	-	-	-	-				
					5.60	9.00	8.60	-	-	-	-	-	-	-	-	-				
					6.00	8.50	9.20	-	-	-	-	-	-	-	-	-				
	136. 142. xx. A2	○	○	2.5	1.40	24.20	5.10	1.60	53.40	4.70	3.20	70.80	8.00	3.80	93.20	9.20	0.80	0.70	60	100
					1.80	20.40	6.30	2.00	42.60	5.90	3.60	62.50	9.20	4.20	83.10	10.10	1.60	1.50	65	105
					2.20	20.00	7.20	2.40	35.30	7.20	4.00	55.70	10.60	4.60	75.30	11.30	3.00	2.00	60	105
					2.60	19.30	8.20	2.80	30.40	8.40	4.40	49.30	11.70	5.00	69.00	12.50	4.00	3.00	65	110
					3.00	17.60	9.30	3.20	28.60	9.50	4.80	44.60	12.90	5.40	63.40	13.70	6.00	4.00	65	110
					3.40	16.50	10.40	3.60	28.20	10.50	5.20	41.90	14.10	5.80	57.50	14.90				
					3.80	17.00	11.40	4.00	27.30	11.50	5.60	40.40	15.10	-	-	-				
					4.20	16.30	12.40	4.40	25.90	12.50	6.00	39.70	16.10	-	-	-				
					4.60	15.10	13.30	4.80	24.30	13.50	-	-	-	-	-	-				
					5.00	14.00	14.30	5.20	22.30	14.60	-	-	-	-	-	-				
					5.40	13.10	15.30	5.60	21.80	15.70	-	-	-	-	-	-				
					5.80	12.40	16.20	6.00	21.40	16.70	-	-	-	-	-	-				

E = narrowest free cross section (water)

Example for ordering:	Type	+	Material no. (xx)	=	Ordering no.
	136. 134. xx. A2	+	1Y	=	136. 134. 1Y. A2

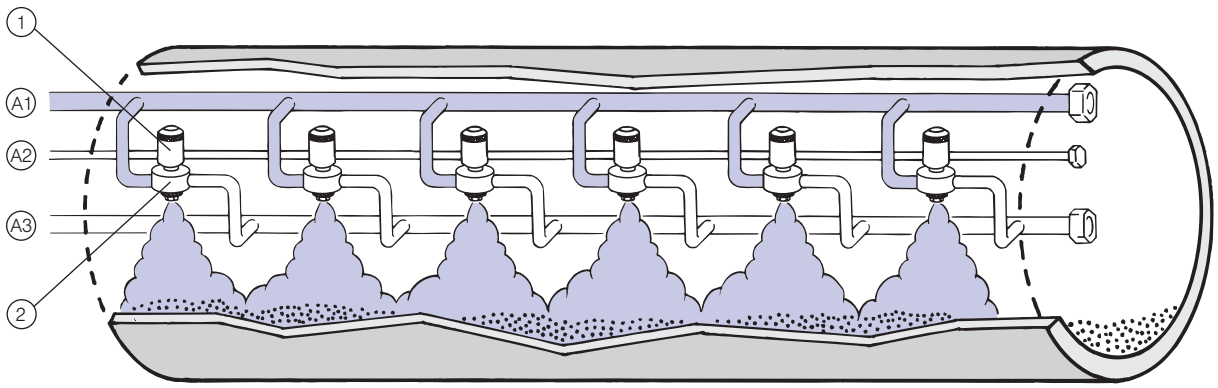

(A1) Liquid supply line
(A2) Control air for pneumatic valve
(A3) Atomizing air supply line

(1) Pneumatically controlled valve
Ordering no. 013. 60x. xx. xx (see Page 41)

(2) Pneumatic atomizing nozzle
Ordering no. 136. xxx. xx. xx

Cereal dampening in a mixing drum

Pneumatic atomizing nozzles, Full cone, pressure principle, internal mixing Series 136.2

Fine full cone atomization and fogging with air or gas. Especially wide spray angle of 60°.
Pressure principle.
Internal mixing of fluids.
Applications:
Humidification of air, cooling, disinfection (e.g. bottles), coating, dosing, release agent applications.

Series 136.2

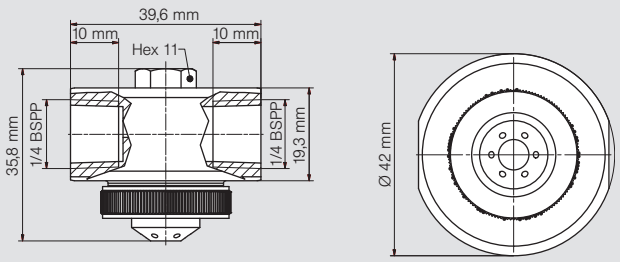

Weight brass: 200 g

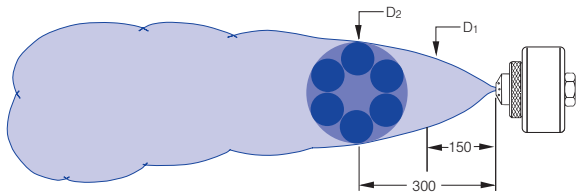

Series 136.2

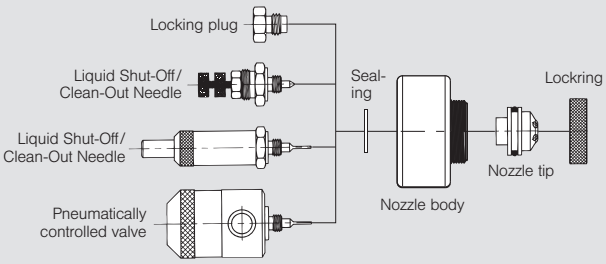

Accessories for series 136 please refer to page 41/42

Spray angle	Ordering no. Type	Mat. no. 1Y AISI 316L	Mat. no. 35 Brass plated	E Ø [mm]	Liquid pressure **p** [bar] 0.7 **p** Air [bar]	0.7 $\dot{V}$ Water [l/h]	0.7 $\dot{V}_n$ Air [m³/h]	1.5 **p** Air [bar]	1.5 $\dot{V}$ Water [l/h]	1.5 $\dot{V}_n$ Air [m³/h]	3.0 **p** Air [bar]	3.0 $\dot{V}$ Water [l/h]	3.0 $\dot{V}_n$ Air [m³/h]	4.0 **p** Air [bar]	4.0 $\dot{V}$ Water [l/h]	4.0 $\dot{V}_n$ Air [m³/h]	Spray dimensions **p** Air [bar]	**p** Water [bar]	D_1 [mm]	D_2 [mm]
60°	**136. 215. xx. A2**	○	○	0.5	1.00	3.00	1.30	1.60	5.80	1.70	2.80	8.50	2.40	3.80	9.40	3.10	1.00	0.70	200	330
					1.20	1.80	1.50	1.80	4.90	1.90	3.20	7.20	2.80	4.20	8.20	3.50	1.60	1.50	230	380
					1.40	0.70	1.80	2.00	3.80	2.10	3.60	5.70	3.20	4.60	6.90	3.90	2.40	2.00	230	385
					-	-	-	2.20	2.80	2.30	4.00	4.00	3.60	5.00	5.40	4.20	3.20	3.00	245	390
					-	-	-	2.40	1.70	2.50	4.40	2.20	4.10	5.40	3.80	4.70	4.20	4.00	250	410
					-	-	-	2.60	0.80	2.80	4.80	0.80	4.50	5.80	2.30	5.20				
					-	-	-	-	-	-	5.00	0.40	4.60	6.00	1.40	5.60				
	136. 222. xx. A2	○	○	1.0	0.80	17.50	2.80	1.60	25.90	4.00	3.00	40.40	5.80	3.80	54.90	6.40	0.80	0.70	250	450
					1.00	6.00	4.30	1.80	14.70	5.30	3.20	31.50	6.90	4.00	45.60	7.30	1.60	1.50	245	465
					-	-	-	2.00	6.70	6.70	3.40	22.20	8.20	4.20	37.60	8.50	2.30	2.00	245	465
					-	-	-	2.20	1.90	8.10	3.60	14.60	9.50	4.40	29.60	9.70	3.20	3.00	250	465
					-	-	-	-	-	-	3.80	8.50	11.00	4.60	21.60	11.20	4.20	4.00	245	465
					-	-	-	-	-	-	4.00	4.50	12.30	4.80	15.30	12.40				
					-	-	-	-	-	-	-	-	-	5.00	9.70	13.80				
					-	-	-	-	-	-	-	-	-	5.20	6.00	15.20				
					-	-	-	-	-	-	-	-	-	5.40	2.90	16.50				
	136. 231. xx. A2	○	○	1.4	1.60	25.60	5.10	2.60	44.20	7.00	3.60	93.70	7.90	4.20	132.90	7.30	2.00	0.70	235	380
					2.00	17.80	6.20	3.00	33.00	8.20	4.00	78.30	9.30	4.60	117.20	9.00	2.60	1.50	245	415
					2.40	11.30	7.20	3.40	24.70	9.20	4.40	65.80	10.60	5.00	101.10	10.40	2.40	2.00	255	420
					2.80	6.90	8.10	3.80	18.10	10.20	4.80	54.90	11.90	5.40	87.90	11.80	3.60	3.00	255	425
					-	-	-	4.20	13.20	11.20	5.20	45.60	13.00	5.80	76.60	13.20	4.20	4.00	265	430
					-	-	-	4.60	9.30	12.00	5.60	38.00	14.10	6.00	71.20	13.80				
					-	-	-	-	-	-	6.00	36.10	14.40	-	-	-				

E = narrowest free cross section (water)

Example for ordering:	Type	+	Material no. (xx)	=	Ordering no.
	136. 215. xx. A2	+	**1Y**	=	**136. 215. 1Y. A2**

Pneumatic atomizing nozzles, Flat fan, pressure principle, internal mixing Series 136.4

Particularly fine flat fan atomization with air or gas. Pressure principle. Internal mixing of fluids.
Applications:
Belt lubrication, cooling, humidification of goods, coating, dosing (e.g. Conveyor belt), release agent applications.

Series 136.4

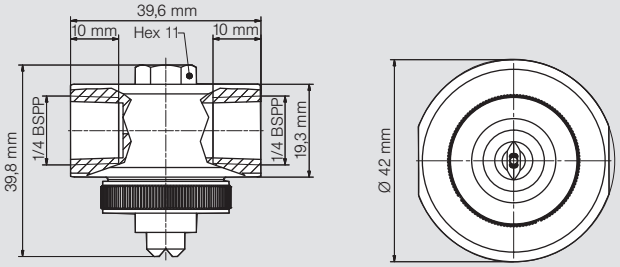

Weight brass: 200 g

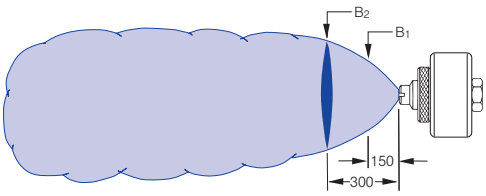

Series 136.4

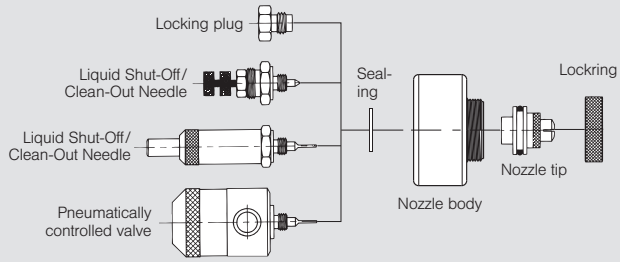

Accessories for series 136 please refer to page 41/42

Spray angle	Ordering no. Type	Mat. no. 1Y AISI 316L	Mat. no. 35 Brass plated	E Ø [mm]	Liquid pressure **p** [bar] 0.7 **p** Air [bar]	0.7 $\dot{V}$ Water [l/h]	0.7 $\dot{V}_n$ Air [m³/h]	1.5 **p** Air [bar]	1.5 $\dot{V}$ Water [l/h]	1.5 $\dot{V}_n$ Air [m³/h]	3.0 **p** Air [bar]	3.0 $\dot{V}$ Water [l/h]	3.0 $\dot{V}_n$ Air [m³/h]	4.0 **p** Air [bar]	4.0 $\dot{V}$ Water [l/h]	4.0 $\dot{V}_n$ Air [m³/h]	Spray dimensions **p** Air [bar]	**p** Water [bar]	B_1 [mm]	B_2 [mm]
45°	136. 414. xx. A2	○	○	0.7	1.00	7.70	1.30	1.40	14.30	1.50	2.20	22.40	2.00	3.00	25.10	2.50	1.40	0.70	85	125
					1.20	6.00	1.50	1.60	13.00	1.60	2.60	20.00	2.30	3.40	23.00	2.80	2.40	1.50	100	145
					1.40	4.20	1.70	1.80	11.60	1.80	3.00	17.70	2.60	3.80	20.90	3.10	3.20	2.00	105	155
					1.60	2.70	1.90	2.00	10.20	2.00	3.40	15.50	3.00	4.20	18.90	3.50	3.80	3.00	120	170
					1.80	1.30	2.10	2.20	8.90	2.20	3.80	13.30	3.40	4.60	16.90	3.80	4.60	4.00	130	210
					-	-	-	2.40	7.40	2.40	4.20	11.00	3.70	5.00	14.90	4.20				
					-	-	-	2.60	5.90	2.60	4.60	8.80	4.10	5.40	12.80	4.60				
					-	-	-	2.80	4.60	2.80	5.00	6.60	4.50	5.80	10.80	5.00				
					-	-	-	3.00	3.20	3.00	5.40	4.30	4.90	6.00	9.80	5.20				
					-	-	-	3.20	2.10	3.20	5.80	2.50	5.30	-	-	-				
					-	-	-	3.40	1.10	3.40	6.00	1.60	5.50	-	-	-				
	136. 443. xx. A2	○	○	1.0	1.20	13.90	1.50	1.60	26.60	1.60	3.00	37.10	2.60	3.60	45.60	2.90	1.20	0.70	110	165
					1.40	11.90	1.70	1.80	24.30	1.80	3.40	33.10	3.00	4.00	41.90	3.30	2.00	1.50	115	190
					1.60	9.50	1.90	2.00	22.00	2.00	3.80	29.50	3.40	4.40	38.30	3.70	2.80	2.00	145	190
					1.80	7.80	2.10	2.20	19.90	2.20	4.20	26.20	3.80	4.80	35.00	4.00	3.80	3.00	150	210
					-	-	-	2.40	18.00	2.40	4.60	23.00	4.20	5.20	31.80	4.50	4.80	4.00	160	230
					-	-	-	2.60	16.20	2.60	5.00	20.20	4.60	5.60	29.00	4.90				
					-	-	-	2.80	14.40	2.80	5.40	17.60	4.90	6.00	26.20	5.20				
					-	-	-	3.00	12.80	3.00	5.80	14.90	5.30	-	-	-				
					-	-	-	3.20	11.30	3.20	6.00	14.10	5.50	-	-	-				
					-	-	-	3.40	9.90	3.40	-	-	-	-	-	-				
					-	-	-	3.60	8.80	3.60	-	-	-	-	-	-				

E = narrowest free cross section (water)

Continued on next page.

Example for ordering:	Type	+	Material no. (xx)	=	Ordering no.
	136. 414. xx. A2	+	1Y	=	136. 414. 1Y. A2

Pneumatic atomizing nozzles, Flat fan, pressure principle, internal mixing Series 136.4

Spray angle	Ordering no. Type	Mat. no. 1Y AISI 316L	Mat. no. 35 Brass plated	E Ø [mm]	Liquid pressure **p** [bar] 0.7 **p** Air [bar]	0.7 $\dot{V}$ Water [l/h]	0.7 $\dot{V}_n$ Air [m³/h]	1.5 **p** Air [bar]	1.5 $\dot{V}$ Water [l/h]	1.5 $\dot{V}_n$ Air [m³/h]	3.0 **p** Air [bar]	3.0 $\dot{V}$ Water [l/h]	3.0 $\dot{V}_n$ Air [m³/h]	4.0 **p** Air [bar]	4.0 $\dot{V}$ Water [l/h]	4.0 $\dot{V}_n$ Air [m³/h]	Spray dimensions **p** Air [bar]	**p** Water [bar]	B_1 [mm]	B_2 [mm]
45°	**136. 462. xx. A2**	○	○	1.5	1.20	19.00	2.60	2.00	22.00	2.00	3.00	61.80	4.00	3.80	76.10	4.60	1.20	0.70	120	140
					1.60	12.20	3.40	2.40	18.00	2.40	3.40	51.90	4.80	4.00	70.40	5.10	2.40	1.50	120	170
					2.00	9.40	4.10	2.80	14.40	2.80	3.80	44.60	5.80	4.20	65.60	5.50	3.20	2.00	120	175
					2.40	7.10	4.80	3.20	11.30	3.20	4.20	39.00	6.60	4.40	61.30	5.90	3.80	3.00	140	205
					2.80	5.70	5.40	3.60	8.80	3.60	4.60	33.40	7.40	4.60	57.30	6.40	6.00	4.00	145	205
					3.20	5.00	6.00	4.00	8.10	3.90	5.00	29.40	8.10	4.80	54.10	6.70				
					3.60	3.60	6.60	4.40	6.20	4.30	5.40	25.50	8.90	5.00	51.30	7.20				
					4.00	3.20	7.20	4.80	4.60	4.60	5.80	22.00	9.60	5.20	49.30	7.70				
					4.40	2.20	7.80	5.20	3.20	4.90	6.00	20.60	9.90	5.40	46.50	8.20				
					-	-	-	5.60	1.60	5.30	-	-	-	5.60	43.70	8.60				
					-	-	-	5.80	0.80	5.40	-	-	-	5.80	41.30	8.90				
					-	-	-	-	-	-	-	-	-	6.00	39.00	9.30				
60°	**136. 425. xx. A2**	○	○	0.5	080	6.50	1.20	1.40	9.40	1.70	2.40	13.20	2.50	2.40	16.10	2.50	1.20	0.70	155	195
					1.20	5.50	1.60	1.80	8.70	2.10	2.60	12.90	2.70	2.80	15.50	2.90	2.20	1.50	165	255
					1.60	4.70	1.90	2.20	7.90	2.40	3.00	12.30	3.00	3.20	15.00	3.20	3.00	2.00	170	265
					2.00	4.00	2.30	2.60	7.20	2.70	3.40	11.80	3.40	3.60	14.50	3.50	3.40	3.00	200	330
					2.40	3.20	2.60	3.00	6.40	3.10	3.80	11.10	3.70	4.00	13.90	3.80	5.60	4.00	200	330
					2.80	2.60	2.90	3.40	5.70	3.40	4.20	10.40	4.00	4.40	13.40	4.10				
					3.00	2.20	3.10	3.80	5.10	3.70	4.60	9.80	4.30	4.80	12.80	4.50				
					-	-	-	4.00	4.80	3.90	5.00	9.20	4.60	5.20	12.20	4.80				
					-	-	-	4.40	4.20	4.20	5.40	8.60	5.00	5.60	11.70	5.10				
					-	-	-	4.80	3.60	4.50	5.80	8.10	5.30	6.00	11.20	5.40				
					-	-	-	5.20	2.80	4.80	6.00	7.80	5.40	-	-	-				
					-	-	-	5.60	2.20	5.10	-	-	-	-	-	-				
					-	-	-	6.00	1.60	5.50	-	-	-	-	-	-				
	136. 452. xx. A2	○	○	1.5	1.00	18.80	3.90	1.80	31.00	5.30	3.20	50.10	7.70	3.80	70.70	8.20	1.00	0.70	130	185
					1.40	8.60	5.70	2.00	25.40	6.30	3.60	39.50	9.40	4.20	58.60	9.60	1.80	1.50	150	240
					1.80	7.40	7.00	2.20	20.10	7.20	4.00	31.30	11.20	4.60	48.60	11.20	2.60	2.00	155	245
					2.20	4.10	8.40	2.40	15.50	8.00	4.40	24.00	12.90	5.00	41.20	13.10	3.60	3.00	175	280
					2.60	1.00	9.80	2.60	12.40	8.90	4.80	17.70	14.50	5.40	33.60	14.80	5.00	4.00	180	285
					2.80	0.10	10.30	2.80	10.40	9.60	5.20	13.40	16.00	5.80	27.50	16.40				
					-	-	-	-	-	-	5.60	10.60	17.50	6.00	24.40	17.20				
					-	-	-	-	-	-	6.00	8.60	18.80	-	-	-				
80°	**136. 433. xx. A2**	○	○	0.4	1.00	11.60	2.00	1.80	18.30	2.80	3.00	31.00	3.70	3.80	37.50	4.40	1.40	0.70	150	210
					1.20	8.10	2.40	2.00	15.30	3.20	3.40	25.40	4.40	4.20	32.40	5.00	2.20	1.50	185	255
					1.40	5.30	2.80	2.20	12.20	3.60	3.80	20.60	5.10	4.60	27.70	5.70	3.00	2.00	205	300
					1.60	3.70	3.20	2.40	9.80	4.00	4.20	16.30	5.90	5.00	23.40	6.50	3.80	4.00	300	485
					-	-	-	2.60	7.60	4.30	4.60	12.50	6.60	5.40	19.40	7.20	5.20	4.00	260	395
					-	-	-	2.80	5.90	4.70	5.00	9.30	7.30	5.80	15.90	7.90				
					-	-	-	3.00	4.40	5.00	5.40	6.50	8.00	6.00	14.20	8.30				

E = narrowest free cross section (water)

Example for ordering:	Type	+	Material no. (xx)	=	Ordering no.
	136. 462. xx. A2	+	1Y	=	136. 462. 1Y. A2

Accessories for pneumatic atomizing nozzles

Series 136

Regulating device and shutting-off needle:

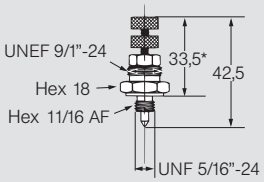

Weight AISI 303/AISI 303: 33 g

Ordering no.		
Type	Mat. no. 16 AISI 303	For all nozzles of the series 136
015. 600	○	

Pneumatically controlled valve
Opening pressure 2.1 bar, max. 180 cycles/min.

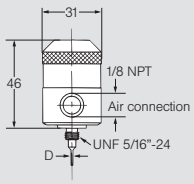

Weight brass: 120 g

Ordering no.				
Type	Mat. no. 16 AISI 303	Mat. no. 35 Brass plated	For nozzles	Needle diameter D [mm]
013. 601. xx. 10	○	○	136. xx1	2.1
013. 602. xx. 10	○	○	136. xx2	1.2
013. 604. xx. 10	○	○	136. xx4	0.6

Quick-cleaning device

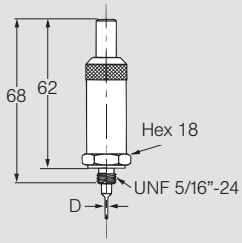

Weight brass: 51 g

Ordering no.				
Type	Mat. no. 16 AISI 303	Mat. no. 35 Brass plated	For nozzles	Needle diameter D [mm]
013. 601. xx. 20	○	○	136. xx1	2.1
013. 602. xx. 20	○	○	136. xx2	1.2
013. 604. xx. 20	○	○	136. xx4	0.6

Regulating device with quick-cleaning needle

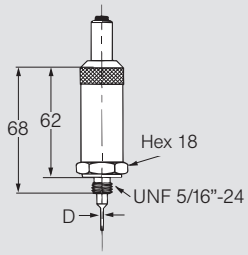

Weight brass: 75 g

Ordering no.				
Type	Mat. no. 16 AISI 303	Mat. no. 35 Brass plated	For nozzles	Needle diameter D [mm]
013. 601. xx. 30	○	○	136. xx1	2.1
013. 602. xx. 30	○	○	136. xx2	1.2
013. 604. xx. 30	○	○	136. xx4	0.6

Example for ordering:	Type	+	Material no. (xx)	=	Ordering no.
	013. 601. xx. 10	+	16	=	013. 601. 16. 10

Accessories for pneumatic atomizing nozzles

Series 136

Screwed connection for hose diameter 6 mm

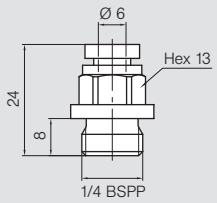

Material: Brass plated
Weight: 12 g

Ordering no.	For all nozzles of the series 136
095. 016. 35. 11. 79. 0	

Angled screwed connection for hose diameter 6 mm

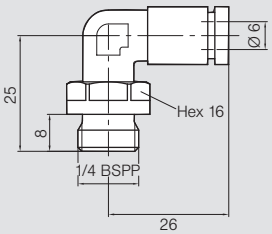

Material: Brass plated
Weight: 35 g

Ordering no.	For all nozzles of the series 136
095. 016. 35. 13. 13. 0	

Screwed connection for hose diameter 8 mm

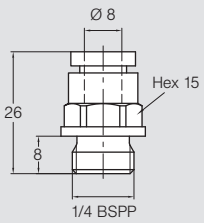

Material: Brass plated
Weight: 14 g

Ordering no.	For all nozzles of the series 136
095. 016. 35. 11. 80. 0	

Angled screwed connection for hose diameter 8 mm

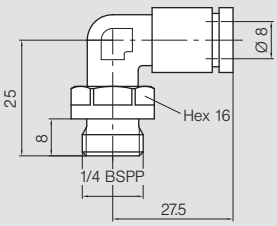

Material: Brass plated
Weight 35 g

Ordering no.	For all nozzles of the series 136
095. 016. 35. 13. 14. 0	

Pneumatic atomizing nozzles, for atomizing viscous media Series 176 ViscoMist™

The ViscoMist™ series offers independent regulation of both atomising air and fan air, which provides the user with infinite control over the viscous fluid's spray pattern and droplet size.

The ViscoMist™ nozzle features a standard 'Liquid Shut-Off/ Clean-Out Needle' function. This design element activates and deactivates the liquid supply, while simultaneously removing excess fluid from the fluid nozzle preventing clogging. This feature is especially vital when the viscous liquids are being applied in continuous process environments.

The modular design of the ViscoMist™ allows maximum flexibility to meet the exact spray requirements.

Interchangeable air caps and various flow capacities are available to suit any spraying application needs.

One nozzle – three spray characters

- Solid stream
  - Full cone
  - Flat fan
- Independent regulation of liquid, atomizing air and fan air
- Fluid circulation possible (Nozzle body with 5 connections)

Outside mixing to spray viscous liquids, for example:

- Coating
- Moisturising
- Lubrication
- Glazing
- Sanitising

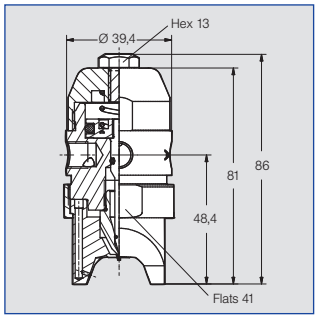

Fluid cap options
Ø 0.38 mm to 2.54 mm

Valve position
Normally closed, fail-safe with loss of air

Signal air pressure
Min. 1.5 bar
Max. 3 bar

Cycles per minute (short term)
180 cycles / min

Material
1Y (AISI 316L)
35 (Nickel plated brass)

Ports
01 (1/8" NPT (F))
11 (1/8 BSPP (F))

Flow rate range

- Water: 7.8 to 307 l/h, at 2 bar
- Air: 7.5 to 28.4 m³/h i.N., at 2 bar

Further information and ordering data on request.

Nozzle body configurations

Nozzle body configuration 2

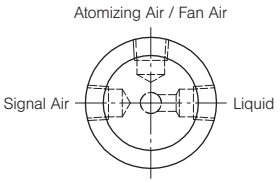

3 connections

Nozzle body configuration 4

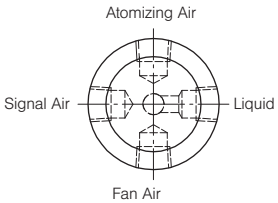

4 connections

Nozzle body configuration 5

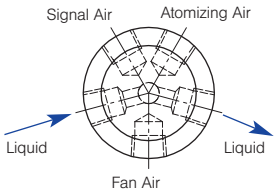

5 connections

Axial-flow hollow cone nozzles

Series 212

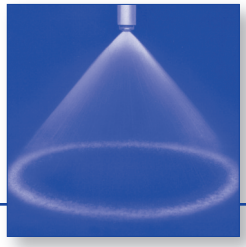

(Mat. no. 17)

Extremely fine, fog-like hollow cone spray.
Applications:
Disinfection, humidification of air, spraying over germinating boxes, product humidification, spraying of oil.

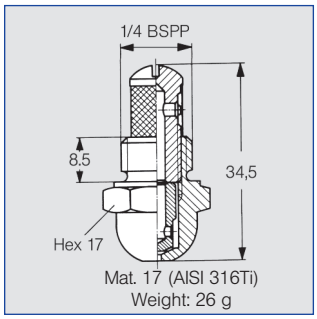

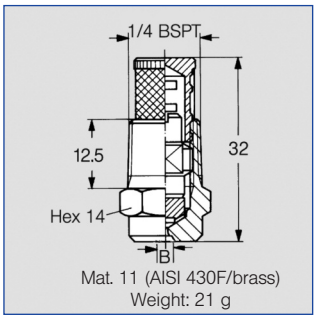

Spray angle	Ordering no. Type	Mat. no. 11 AISI 430F/Brass	Mat. no. 17 AISI 316Ti	Code 1/4 BSPP	Code 1/4 BSPT	B Ø [mm]	E Ø [mm]	V̇ [l/min] p [bar] 2.0	3.0	5.0	7.0	10.0	20.0	Spray diameter D at p=7 bar H = 100 mm
60°	212. 004	-	○	AC	-	0.10	0.10	-	-	0.013	0.015	0.018	0.025	80
	212. 014	-	○	AC	-	0.15	0.15	-	-	0.019	0.023	0.027	0.039	80
	212. 054	-	○	AC	-	0.20	0.15	-	-	0.027	0.033	0.039	0.057	80
80°	212. 085	○*	○**	-	CC	0.25	0.25	-	-	0.040	0.047	0.057	0.080	140
	212. 125	○*	○**	AC	CC	0.35	0.25	-	0.048	0.062	0.073	0.088	0.124	140
	212. 145	○	-	-	CC	0.40	0.30	-	0.063	0.082	0.097	0.116	0.164	140
	212. 165	○	-	-	CC	0.45	0.30	-	0.080	0.103	0.122	0.146	0.206	140
	212. 185	○	-	-	CC	0.50	0.35	-	0.101	0.130	0.154	0.184	0.260	140
	212. 205	○	-	-	CC	0.60	0.35	0.107	0.131	0.168	0.199	0.238	0.336	140
	212. 245	○	-	-	CC	0.70	0.45	0.166	0.202	0.261	0.310	0.370	0.522	140
	212. 285	○*	○**	AC	CC	0.90	0.60	0.262	0.320	0.390	0.460	0.550	0.770	140

B = Bore diameter · E = Narrowest free cross section
*Only available with code CC
**Only available with code AC

The integrated strainer avoids clogging of the nozzle and increases its service life.

Example for ordering:	Type	+	Material-No.	+	Code	=	Ordering no.
	212. 004	+	17	+	AC	=	212. 004. 17. AC

Materials

Material no.	Nozzle	Strainer holder	Strainer
11	AISI 430F	Brass	Monel
17	AISI 316Ti	AISI 316Ti	AISI 316

Conversion formula for the above series: $\dot{V}_2 = \dot{V}_1 * \sqrt{\frac{p_2}{p_1}}$

Axial-flow hollow cone nozzles

Series 214 / 216

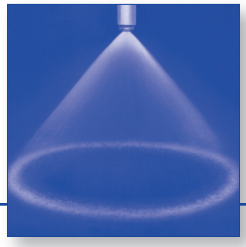

(Mat. no. 17)

Fine, uniform hollow cone spray.
Applications:
Dust control, spraying onto filters, spray drying, hand disinfection.

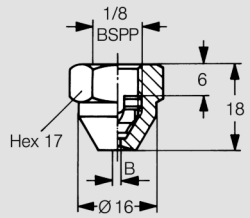

Series 214
Weight brass: 27 g

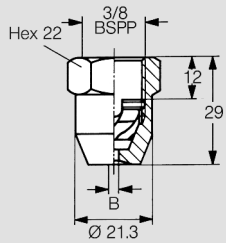

Series 216
Weight brass: 60 g

Spray angle	Ordering no. Type	Mat. no. 17 AISI 316Ti	Mat. no. 30 Brass	G BSPP	B Ø [mm]	E Ø [mm]	V̇ [l/min] p [bar] 0.5	1.0	2.0	3.0	5.0	10.0	20.0	Spray diameter D at p=3 bar H = 250 mm
60°	214. 184	○	○	1/8"	0.50	0.50	-	-	0.08	0.10	0.13	0.18	0.25	200
80°	214. 245	○	○	1/8"	1.00	0.50	-	-	0.16	0.20	0.25	0.36	0.51	450
	214. 305	○	○	1/8"	1.80	0.50	-	0.23	0.32	0.39	0.51	0.72	1.01	450
60°	216. 324	○	○	3/8"	1.00	1.00	-	0.28	0.40	0.49	0.63	0.89	1.26	200
	216. 364	○	○	3/8"	1.40	1.40	-	0.45	0.63	0.77	1.00	1.41	1.99	200
	216. 404	○	○	3/8"	2.00	2.00	-	0.71	1.00	1.22	1.58	2.24	3.16	200
90°	216. 496	○	○	3/8"	3.00	2.00	-	1.20	1.70	2.08	2.69	3.80	5.38	500
	216. 566	○	○	3/8"	4.00	2.00	-	1.77	2.50	3.06	3.95	5.59	7.91	500
	216. 646	○	○	3/8"	3.50	2.00	2.00	2.83	4.00	4.90	6.32	8.94	12.65	500
	216. 686	○	○	3/8"	4.00	2.00	2.50	3.54	5.00	6.12	7.91	11.18	15.81	500
	216. 726	○	○	3/8"	5.00	2.00	3.15	4.45	6.30	7.72	9.96	14.09	19.92	500
	216. 776	○	○	3/8"	6.00	2.00	4.30	6.00	8.50	10.40	13.40	19.00	26.90	500

B = Bore diameter · E = Narrowest free cross section

Example for ordering	Type	+	Material no.	=	Ordering no.
	214. 184	+	17	=	214. 184. 17

Conversion formula for the above series: $\dot{V}_2 = \dot{V}_1 * \sqrt{\frac{p_2}{p_1}}$

Tangential-flow hollow cone nozzles
Plastic version
Series 302

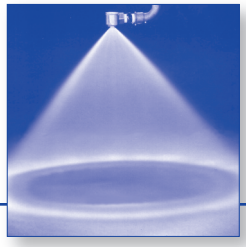

(Mat. no. 5E / 53)

Uniform hollow cone spray. Non-clogging nozzle, without swirl insert.
Applications:
Dust control, spraying onto filters, foam control, pasteurization.

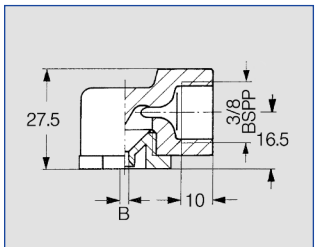

Type 302.32X – 302.48X
Weight: 13 g

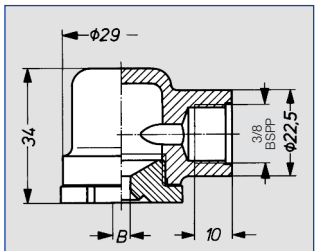

Type 302.52X – 302.99X
Weight: 18 g

Spray angle	Ordering no. Type	Mat. no. 5E PVDF	Mat. no. 51 PA	Mat. no. 53 PP	B Ø [mm]	E Ø [mm]	V̇ [l/min] p [bar] 0.5	1.0	2.0	[US gal./min] at 40 psi	3.0	5.0	10.0	Spray diameter D at p=2 bar H = 250 mm	H = 500 mm
60°	302. 364	-	○	○	1.50	1.50	0.31	0.45	0.63	0,20	0.77	1.00	1.41	200	350
	302. 464	-	○	○	3.80	1.95	0.70	0.99	1.40	0,43	1.71	2.21	3.13	300	560
90°	302. 326	○	○	-	1.20	0.90	0.20	0.28	0.40	0.12	0.49	0.63	0.89	400	700
	302. 366	○	○	-	2.10	1.30	0.31	0.45	0.63	0.20	0.77	1.00	1.41	400	880
	302. 406	○	○	○	2.60	1.40	0.50	0.71	1.00	0.31	1.22	1.58	2.24	400	880
	302. 486	-	○	○	2.60	2.60	0.80	1.13	1.60	0.50	1.96	2.53	3.58	400	880
	302. 526	-	○	○	5.00	2.00	1.00	1.41	2.00	0.62	2.45	3.16	4.47	400	880
	302. 566	-	○	○	5.00	2.40	1.25	1.77	2.50	0.78	3.06	3.95	5.59	400	880
	302. 606	-	○	○	5.00	3.20	1.57	2.23	3.15	0.98	3.86	4.98	7.04	450	950
	302. 686	-	○	-	7.50	3.40	2.50	3.45	5.00	1.55	6.12	7.91	11.18	500	1050
	302. 766	-	○	-	9.00	4.30	4.00	5.66	8.00	2.48	9.80	12.65	17.89	500	1050
	302. 846	-	○	○	11.00	5.20	6.25	8.84	12.50	3.88	15.31	19.67	27.95	550	1130
	302. 886	○	○	○	11.00	6.40	8.00	11.31	16.00	4.96	19.60	25.30	35.78	550	1130
	302. 966	-	○	-	11.00	8.60	12.50	17.68	25.00	7.75	30.62	39.53	55.90	550	1130
130°	302. 328	○	-	-	1.35	0.80	0.20	0.28	0.40	0.12	0.49	0.63	0.89	700	1380
	302. 368	○	○	-	1.85	1.10	0.31	0.45	0.63	0.20	0.77	1.00	1.41	700	1380
	302. 408	○	○	-	3.65	1.30	0.50	0.71	1.00	0.31	1.22	1.58	2.24	700	1380
	302. 488	-	○	○	5.20	1.60	0.80	1.13	1.60	0.50	1.96	2.53	3.58	700	1380
	302. 528	-	○	-	5.00	2.00	1.00	1.41	2.00	0.62	2.45	3.16	4.47	700	1380
	302. 568	-	○	-	5.00	2.40	1.25	1.77	2.50	0.78	3.06	3.95	5.59	780	1520
	302. 608	○	○	○	5.00	3.20	1.57	2.23	3.15	0.98	3.86	4.98	7.04	780	1520
	302. 648	-	○	-	7.50	3.00	2.00	2.83	4.00	1.20	4.90	6.32	8.94	950	1850
	302. 688	-	○	-	7.50	3.40	2.50	3.54	5.00	1.55	6.12	7.91	11.18	950	1850
	302. 728	-	○	-	7.50	4.10	3.15	4.45	6.30	1.89	7.72	9.96	14.09	950	1850
	302. 768	-	○	-	9.00	4.30	4.00	5.66	8.00	2.48	9.80	12.65	17.89	950	1850
	302. 848	-	○	-	11.00	5.20	6.25	8.84	12.50	3.88	15.31	19.76	27.95	950	1850
	302. 888	-	○	○	11.00	6.40	8.00	11.31	16.00	4.96	19.60	25.30	35.78	950	1850
	302. 968	○	○	-	11.00	8.60	12.50	17.68	25.00	7.75	30.62	39.53	55.90	950	1850

B = Bore diameter · E = Narrowest free cross section

Example for ordering	Type	+	Material no.	=	Ordering no.
	302. 364	+	51	=	302. 364. 51

Conversion formula for the above series: $\dot{V}_2 = \dot{V}_1 * \sqrt{\frac{p_2}{p_1}}$

Axial-flow full cone nozzles

Series 490 / 491

NEW Patent pending

(Mat. no. 1Y)

Non-clogging nozzle design. Stable spray angle. Particularly even liquid distribution.
Applications:
Cleaning and washing processes, surface spraying, Container cleaning, foam precipitation, degassing of liquids.

Series 490

Series 491

Series 490/491 represents a new generation within the axial-flow full cone nozzles product group. These nozzles were developed using state-of-the-art design and simulation methods (CFD).

Nozzles of series 490/491 replace series 460/461 which are still available on request.

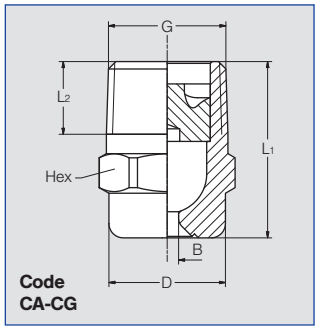

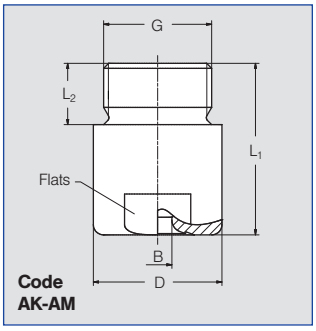

Code	Dimensions [mm] G	L_1	L_2	D	Hex/Flats	Weight Brass
CA	1/8 BSPT	18.0	6.5	10.0	11	13 g
CC	1/4 BSPT	22.0	10.0	13.0	14	16 g
CE	3/8 BSPT	24.5	10.0	16.0	17	30 g
CE	3/8 BSPT	30.0	10.0	16.0	17	50 g
CG	1/2 BSPT	32.5	13.0	21.0	22	60 g
CG	1/2 BSPT	43.5	13.0	21.0	22	85 g
AK	3/4 BSPP	42.0	15,0	32.0	27	190 g
AM	1 BSPP	56.0	17.0	40.0	36	350 g

Subject to technical modification.
In a critical installation situation, please ask for the exact dimensions.

Spray angle	Ordering no. Type	Mat. no. 1Y AISI 316L	Mat. no. 30 Brass	Code 1/8 BSPT	1/4 BSPT	3/8 BSPT	1/2 BSPT	3/4 BSPP	1 BSPP	B Ø [mm]	E Ø [mm]	$\dot{V}$ [l/min] p [bar] 0.5	1.0	2.0	3.0	5.0	7.0	10.0	Spray diameter D at p=2 bar H = 200 mm	H = 500 mm
45°	**490. 403**	○	○	**CA**	-	-	-	-	-	1.25	1.25	0.57	0.76	1.00	1.18	1.44	1.65	1.90	160	400
	490. 523	○	○	**CA**	-	-	-	-	-	1.70	1.70	1.15	1.52	2.00	2.35	2.89	3.30	3.81	160	400
	490. 603	○	○	-	**CC**	**CE***	-	-	-	2.00	2.00	1.81	2.39	3.15	3.70	4.54	5.20	6.00	160	400
	490. 643	-	○	-	-	**CE**	-	-	-	2.45	2.45	2.30	3.03	4.00	4.70	5.77	6.60	7.61	160	400
	490. 683	-	○	-	-	**CE**	-	-	-	2.55	2.55	2.87	3.79	5.00	5.88	7.21	8.25	9.52	160	400
	490. 703	-	○	-	-	**CE**	-	-	-	2.65	2.65	3.22	4.24	5.60	6.59	8.08	9.24	10.66	160	400
	490. 723	○	○	-	-	**CE**	-	-	-	2.85	2.85	3.62	4.77	6.30	7.41	9.09	10.40	11.99	160	400
	490. 783	-	○	-	-	-	**CG**	-	-	3.45	3.45	5.17	6.82	9.00	10.58	12.98	14.85	17.12	160	400
	490. 843	-	○	-	-	-	**CG**	-	-	3.80	3.80	7.18	9.47	12.50	14.70	18.03	20.63	23.80	160	400
60°	**490. 404**	○	○	**CA**	-	-	-	-	-	1.15	1.15	0.57	0.76	1.00	1.18	1.44	1.65	1.90	220	560
	490. 444	○	-	**CA**	-	-	-	-	-	1.25	1.25	0.72	0.95	1.25	1.47	1.80	2.06	2.38	220	560
	490. 484	○	○	**CA**	-	-	-	-	-	1.45	1.45	0.92	1.21	1.60	1.88	2.31	2.64	3.05	220	560
	490. 524	○	○	**CA**	-	-	-	-	-	1.60	1.60	1.15	1.52	2.00	2.35	2.89	3.30	3.81	220	560
	490. 564	○	○	**CA**	-	-	-	-	-	1.80	1.80	1.44	1.89	2.50	2.94	3.61	4.13	4.76	220	560
	490. 604	○	○	**CA**	**CC**	**CE**	-	-	-	2.05	2.05	1.81	2.39	3.15	3.70	4.54	5.20	6.00	220	560
	490. 644	○	○	-	**CC**	**CE**	-	-	-	2.30	2.30	2.30	3.03	4.00	4.70	5.77	6.60	7.61	220	560
	490. 684	○	○	-	**CC**	**CE**	-	-	-	2.60	2.60	2.87	3.79	5.00	5.88	7.21	8.25	9.52	220	560
	490. 724	○	○	-	**CC**	**CE**	-	-	-	2.95	2.80	3.62	4.77	6.30	7.41	9.09	10.40	11.99	220	560
	490. 764	○	○	-	-	**CE**	-	-	-	3.25	3.25	4.59	6.06	8.00	9.41	11.54	13.20	15.22	220	560
	490. 804	○	○	-	-	**CE**	-	-	-	3.70	3.70	5.74	7.58	10.00	11.76	14.43	16.51	19.04	220	560
	490. 844	○	○	-	-	-	**CG**	-	-	4.05	4.05	7.18	9.47	12.50	14.70	18.03	20.63	23.80	220	560
	490. 884	○	○	-	-	-	**CG**	-	-	4.65	4.65	9.19	12.13	16.00	18.82	23.08	26.41	30.46	220	560
	490. 924	○	○	-	-	-	-	**AK**	-	5.20	5.20	11.49	15.16	20.00	23.52	28.85	33.01	38.07	220	560
	490. 964	○	○	-	-	-	-	**AK**	-	5.80	5.80	14.36	18.95	25.00	29.40	36.07	41.26	47.59	220	560
	491. 044	○	○	-	-	-	-	-	**AM**	7.25	7.25	22.97	30.31	40.00	47.04	57.71	66.02	76.15	220	560
	491. 084	○	○	-	-	-	-	-	**AM**	8.15	8.15	28.72	37.89	50.00	58.80	72.14	82.53	95.18	220	560

*Only available in material 30 · B = Bore diameter · E = Narrowest free cross section

Continued on next page.

Conversion formula for the above series: $\dot{V}_2 = \dot{V}_1 * \left(\frac{p_2}{p_1}\right)^{0,4}$
(≤ 10 bar)

Axial-flow full cone nozzles

Series 490 / 491

NEW Patent pending

Spray angle	Ordering no. Type	Mat. no. 1Y AISI 316L	Mat. no. 30 Brass	Code 1/8 BSPT	Code 1/4 BSPT	Code 3/8 BSPT	Code 1/2 BSPT	Code 3/4 BSPP	Code 1 BSPP	B Ø [mm]	E Ø [mm]	V̇ [l/min] p [bar] 0.5	1.0	2.0	3.0	5.0	7.0	10.0	Spray diameter D at p=2 bar H = 200 mm	H = 500 mm
90°	490. 406	○	○	CA	-	-	-	-	-	1.20	1.20	0.57	0.76	1.00	1.18	1.44	1.65	1.90	380	860
	490. 446	-	○	CA	-	-	-	-	-	1.30	1.30	0.72	0.95	1.25	1.47	1.80	2.06	2.38	380	860
	490. 486	○	○	CA	-	-	-	-	-	1.45	1.45	0.92	1.21	1.60	1.88	2.31	2.64	3.05	380	860
	490. 526	○	○	CA	-	-	-	-	-	1.70	1.55	1.15	1.52	2.00	2.35	2.89	3.30	3.81	380	860
	490. 566	○	○	CA	-	-	-	-	-	1.90	1.90	1.44	1.89	2.50	2.94	3.61	4.13	4.76	380	860
	490. 606	○	○	CA	-	CE	-	-	-	2.10	2.05	1.81	2.39	3.15	3.70	4.54	5.20	6.00	380	860
	490. 646	○	○	-	CC	CE	-	-	-	2.40	2.40	2.30	3.03	4.00	4.70	5.77	6.60	7.61	390	960
	490. 686	○	○	-	CC	CE	-	-	-	2.70	2.70	2.87	3.79	5.00	5.88	7.21	8.25	9.52	390	960
	490. 726	○	○	-	CC	CE	-	-	-	3.20	2.80	3.62	4.77	6.30	7.41	9.09	10.40	11.99	390	960
	490. 746	○	○	-	-	CE	-	-	-	3.15	3.15	4.08	5.38	7.10	8.35	10.24	11.72	13.52	390	960
	490. 766	○	○	-	-	CE	-	-	-	3.40	3.40	4.59	6.06	8.00	9.41	11.54	13.20	15.22	390	960
	490. 806	○	○	-	-	CE	-	-	-	3.90	3.90	5.74	7.58	10.00	11.76	14.43	16.51	19.04	390	960
	490. 846	○	○	-	-	CE	-	-	-	4.65	4.00	7.18	9.47	12.50	14.70	18.03	20.63	23.80	390	960
	490. 886	○	○	-	-	-	CG	-	-	5.45	4.50	9.19	12.13	16.00	18.82	23.08	26.41	30.46	390	960
	490. 926	○	○	-	-	-	CG	-	-	5.90	4.50	11.49	15.16	20.00	23.52	28.85	33.01	38.07	390	960
	490. 966	○	○	-	-	-	CG	AK	-	6.55	4.85	14.36	18.95	25.00	29.40	36.07	41.26	47.59	390	960
	491. 006	○	○	-	-	-	-	AK	-	7.55	5.50	18.09	23.87	31.50	37.05	45.45	51.99	59.97	390	960
	491. 046	○	○	-	-	-	-	AK	-	8.60	6.60	22.97	30.31	40.00	47.04	57.71	66.02	76.15	390	960
	491. 086	○	○	-	-	-	-	-	AM	9.45	7.25	28.72	37.89	50.00	58.80	72.14	82.53	95.18	390	960
	491. 126	○	○	-	-	-	-	-	AM	10.40	8.00	36.18	47.75	63.00	74.09	90.89	103.98	119.93	390	960
	491. 146	○	-	-	-	-	-	-	AM	11.00	7.50	40.78	53.81	71.00	83.50	102.43	117.19	135.16	390	960
120°	490. 368	○	○	CA	-	-	-	-	-	0.85	0.65	0.36	0.48	0.63	0.74	0.91	1.04	1.20	680	1220
	490. 408	○	○	CA	-	-	-	-	-	1.20	1.20	0.57	0.76	1.00	1.18	1.44	1.65	1.90	680	1220
	490. 448	○	○	CA	-	-	-	-	-	1.30	1.30	0.72	0.95	1.25	1.47	1.80	2.06	2.38	680	1220
	490. 488	○	○	CA	-	-	-	-	-	1.45	1.45	0.92	1.21	1.60	1.88	2.31	2.64	3.05	680	1220
	490. 528	○	○	CA	-	-	-	-	-	1.70	1.70	1.15	1.52	2.00	2.35	2.89	3.30	3.81	680	1220
	490. 568	○	○	CA	-	-	-	-	-	1.90	1.90	1.44	1.89	2.50	2.94	3.61	4.13	4.76	680	1220
	490. 608	○	○	CA	-	-	-	-	-	2.10	2.05	1.81	2.39	3.15	3.70	4.54	5.20	6.00	680	1220
	490. 648	○	○	-	CC	CE	-	-	-	2.40	2.40	2.30	3.03	4.00	4.70	5.77	6.60	7.61	680	1330
	490. 688	○	○	-	CC	CE	-	-	-	2.75	2.75	2.87	3.79	5.00	5.88	7.21	8.25	9.52	680	1330
	490. 728	○	○	-	CC	CE	-	-	-	3.20	2.80	3.62	4.77	6.30	7.41	9.09	10.40	11.99	680	1330
	490. 748	○	○	-	-	CE	-	-	-	3.20	3.20	4.08	5.38	7.10	8.35	10.24	11.72	13.52	680	1330
	490. 768	○	○	-	-	CE	-	-	-	3.45	3.45	4.59	6.44	8.00	9.41	11.54	13.20	15.22	680	1330
	490. 808	○	○	-	-	CE	-	-	-	3.90	3.90	5.74	7.58	10.00	11.76	14.43	16.51	19.04	680	1330
	490. 848	○	○	-	-	CE	-	-	-	4.70	4.00	7.18	9.47	12.50	14.70	18.03	20.63	23.80	680	1330
	490. 888	○	○	-	-	-	CG	-	-	5.10	4.50	9.19	12.13	16.00	18.82	23.08	26.41	30.46	680	1330
	490. 928	○	○	-	-	-	CG	-	-	5.80	4.75	11.49	15.16	20.00	23.52	28.85	33.01	38.07	680	1330
	490. 968	○	○	-	-	-	CG	AK	-	6.65	4.85	14.36	18.95	25.00	29.40	36.07	41.26	47.59	680	1330
	491. 048	○	○	-	-	-	-	AK	-	9.20	5.85	22.97	30.31	40.00	47.04	57.71	66.02	76.15	680	1330
	491. 128	○	○	-	-	-	-	-	AM	10.80	7.75	36.18	47.75	63.00	74.09	90.89	103.98	119.93	680	1330
	491. 148	○	-	-	-	-	-	-	AM	11.40	7.65	40.78	53.81	71.00	83.50	102.43	117.19	135.16	680	1330

B = Bore diameter · E = Narrowest free cross section

Other nozzle materials (special alloys, plastics) are available on request.

Example for ordering:	Type	+	Material no.	+	Code	=	Ordering no.
	490. 406	+	1Y	+	CA	=	490. 406. 1Y. CA

Conversion formula for the above series: (≤ 10 bar)

$$\dot{V}_2 = \dot{V}_1 * \left(\frac{p_2}{p_1}\right)^{0,4}$$

Axial-flow full cone nozzles

Series 460 / 461

Very uniform spray pattern. Large free cross-sections, due to optimized x-style swirl insert.
Applications:
Cleaning and washing process, cooling of gaseous fluids and solids, surface spraying, spraying onto mats in air washers, improving of chemical reactions.

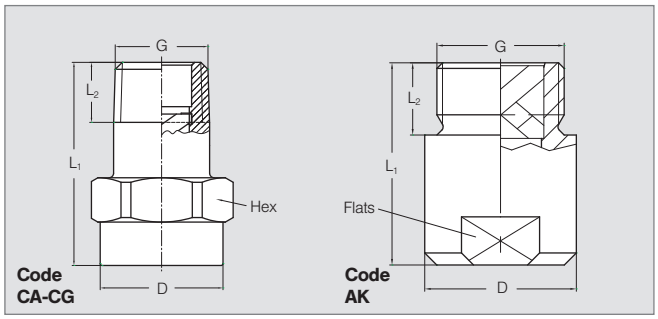

Code	Dimensions [mm] G	L_1	L_2	D	Hex/Flats
CA	1/8 BSPT	22.0	6.5	13.0	14
CC	1/4 BSPT	22.0	9.7	13.0	14
CE	3/8 BSPT	30.0	10.0	17.0	17
CG	1/2 BSPT	43.5	13.2	22.0	22
AK	3/4 BSPP	42.0	15.0	31.5	27

Subject to technical modifications. Please enquire about the exact dimensions if the installation situation is critical!

Spray angle	Ordering no. Type	Mat.-no. 5E PVDF	Code 1/8 BSPT	1/4 BSPT	3/8 BSPT	1/2 BSPT	3/4 BSPP	B Ø [mm]	E Ø [mm]	$\dot{V}$ [l/min] p [bar] 0.5	1.0	2.0	3.0	5.0	7.0	10.0	Spray diameter D at p=2 bar H = 200 mm	H = 500 mm
60°	**460. 644**	○	-	**CC**	-	-	-	2.40	1.90	2.30	3.03	4.00	4.70	5.77	6.60	7.61	220	560
	460. 964	○	-	-	-	-	**AK**	5.80	4.90	14.36	18.95	25.00	29.40	36.07	41.26	47.59	220	560
90°	**460. 326**	○	**CA**	-	-	-	-	0.80	0.55	0.23	0.30	0.40	0.47	0.58	0.66	0.76	380	860
	460. 406	○	**CA**	-	-	-	-	1.20	0.85	0.57	0.76	1.00	1.18	1.44	1.65	1.90	380	860
	460. 486	○	**CA**	-	-	-	-	1.45	1.20	0.92	1.21	1.60	1.88	2.31	2.64	3.05	380	860
	460. 526	○	**CA**	-	-	-	-	1.65	1.30	1.15	1.52	2.00	2.35	2.89	3.30	3.81	380	860
	460. 606	○	**CA**	-	**CE**	-	-	2.05	1.45	1.81	2.39	3.15	3.70	4.54	5.20	6.00	380	860
	460. 646	○	-	**CC**	-	-	-	2.30	1.80	2.30	3.03	4.00	4.70	5.77	6.60	7.61	390	960
	460. 726	○	-	-	**CE**	-	-	2.95	2.00	3.62	4.77	6.30	7.41	9.09	10.40	11.99	390	960
	460. 746	○	-	-	**CE**	-	-	3.30	1.90	4.08	5.38	7.10	8.35	10.24	11.72	13.52	390	960
	460. 766	○	-	-	**CE**	-	-	3.30	2.40	4.59	6.06	8.00	9.41	11.54	13.20	15.22	390	960
	460. 806	○	-	-	**CE**	-	-	3.70	2.70	5.74	7.58	10.00	11.76	14.43	16.51	19.04	390	960
	460. 846	○	-	-	**CE**	-	-	4.05	3.20	7.18	9.47	12.50	14.70	18.03	20.63	23.80	390	960
	460. 886	○	-	-	-	**CG**	-	4.70	3.10	9.19	12.13	16.00	18.82	23.08	26.41	30.46	390	960
	460. 966	○	-	-	-	**CG**	-	5.80	3.80	14.36	18.95	25.00	29.40	36.07	41.26	47.59	390	960
	461. 006	○	-	-	-	**CG**	-	6.40	3.80	18.09	23.87	31.50	37.05	45.45	51.99	59.97	390	960
	461. 046	⊗	-	-	-	-	**AK**	7.20	5.30	22.97	30.31	40.00	47.04	57.71	66.02	76.15	390	960

B = Bore diameter · E = Narrowest free cross section

⊗ Material PP (Material no. 53), connection 3/4 BSPT (Code CK)

Continued on next page.

Conversion formula for the above series: $\dot{V}_2 = \dot{V}_1 * \left(\frac{p_2}{p_1}\right)^{0,4}$
(≤ 10 bar)

Axial-flow full cone nozzles

Series 460 / 461

Spray angle	Ordering no. Type	Mat.-no. 5E PVDF	Code 1/8 BSPT	Code 1/4 BSPT	Code 3/8 BSPT	Code 1/2 BSPT	Code 3/4 BSPP	B Ø [mm]	E Ø [mm]	V̇ [l/min] p [bar] 0.5	1.0	2.0	3.0	5.0	7.0	10.0	Spray diameter D at p=2 bar H = 200 mm	H = 500 mm
120°	460. 408	○	CA	-	-	-	-	1.20	0.85	0.57	0.76	1.00	1.18	1.44	1.65	1.90	680	1220
	460. 488	○	CA	-	-	-	-	1.50	1.00	0.92	1.21	1.60	1.88	2.31	2.64	3.05	680	1220
	460. 528	○	CA	-	-	-	-	1.65	1.20	1.15	1.52	2.00	2.35	2.89	3.30	3.81	680	1220
	460. 608	○	CA	-	-	-	-	2.10	1.40	1.81	2.39	3.15	3.70	4.54	5.20	6.00	680	1220
	460. 648	○	-	CC	-	-	-	2.45	1.60	2.30	3.03	4.00	4.70	5.77	6.60	7.61	680	1330
	460. 728	○	-	-	CE	-	-	3.10	1.90	3.62	4.77	6.30	7.41	9.09	10.40	11.99	680	1330
	460. 748	○	-	-	CE	-	-	3.30	1.90	4.08	5.38	7.10	8.35	10.24	11.72	13.52	680	1330
	460. 768	○	-	-	CE	-	-	3.50	1.90	4.59	6.44	8.00	9.41	11.54	13.20	15.22	680	1330
	460. 808	○	-	-	CE	-	-	3.80	2.40	5.74	7.58	10.00	11.76	14.43	16.51	19.04	680	1330
	460. 848	○	-	-	CE	-	-	4.20	2.70	7.18	9.47	12.50	14.70	18.03	20.63	23.80	680	1330
	460. 888	○	-	-	-	CG	-	4.60	3.10	9.19	12.13	16.00	18.82	23.08	26.41	30.46	680	1330
	460. 968	○	-	-	-	CG	-	5.90	4.10	14.36	18.95	25.00	29.40	36.07	41.26	47.59	680	1330
	461. 048	⊗	-	-	-	-	AK	7.60	4.90	22.97	30.31	40.00	47.04	57.71	66.02	76.15	680	1330

B = Bore diameter · E = Narrowest free cross section

⊗ Material PP (Material no. 53), connection 3/4 BSPT (Code CK)

The folded page at the end of the catalogue will give you a survey on the various assembly possibilities.
For complete assembly accessories, please refer to »Accessories«.

Example for ordering:	Type	+	Material-no.	+	Code	=	Ordering no.
	460. 408	+	5E	+	CA	=	460. 408. 5E. CA

Conversion formula for the above series: $\dot{V}_2 = \dot{V}_1 * \left(\frac{p_2}{p_1}\right)^{0,4}$
(≤ 10 bar)

Tangential-flow full cone nozzles

Series 422

(Mat. no. 17)

Tangentially arranged liquid supply. Without swirl inserts. Non-clogging. Stable spray angle. Uniform spray.
Applications:
Cleaning and washing processes, surface spraying, bottle cleaning, keg cleaning, sausage showers, foam control, degassing.

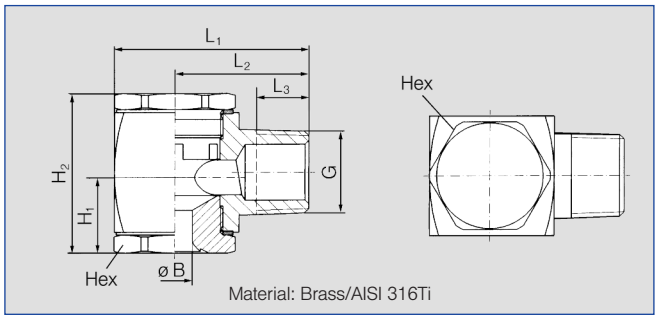

Dimensions [mm]							Weight Brass
G	L_1	L_2	L_3	H_1	H_2	Hex	
1/4 BSPT	28.0	20.0	10.0	8.0	20.5	12.0	43 g
3/8 BSPT	36.0	25.0	10.0	11.0	26.5	19.0	105 g
1/2 BSPT	48.5	33.5	13.0	20.0	38.5	27.0	250 g
3/4 BSPT	58.0	38.0	14.5	23.5	57.0	36.0	660 g
1 BSPT	76.0	48.5	17.0	27.5	66.0	41.0	1.330 g

Spray angle	Ordering no. Type	Mat.-no. 30 Brass	Mat.-no. 17[1] AISI 316Ti/AISI 316L	Code 1/4 BSPT	Code 3/8 BSPT	Code 1/2 BSPT	Code 3/4 BSPT	Code 1 BSPT	B Ø [mm]	E Ø [mm]	V̇ [l/min] p [bar] 0.5	1.0	2.0	[US gal./min] at 40 psi	3.0	5.0	10.0	Spray diameter D at p=1-10 bar H = 200 mm	H = 500 mm
60°	422. 644	○	○	-	CE	-	-	-	3.00	3.00	2.00	2.83	4.00	1.24	4.90	6.32	8.94	225	510
90°	422. 406	○	○	CC	-	-	-	-	1.50	1.45	0.50	0.71	1.00	0.31	1.22	1.58	2.24	380	860
	422. 486	-	○	CC	-	-	-	-	1.90	1.80	0.80	1.13	1.60	0.50	1.96	2.53	3.58	380	860
	422. 566	○	○	CC	-	-	-	-	2.30	2.20	1.25	1.77	2.50	0.78	3.06	3.95	5.59	380	860
	422. 606	○	○	-	CE	-	-	-	2.60	2.50	1.57	2.23	3.15	0.98	3.86	4.98	7.04	380	860
	422. 646	○	○	-	CE	-	-	-	3.00	2.90	2.00	2.83	4.00	1.24	4.90	6.32	8.94	390	960
	422. 726	○	-	-	CE	-	-	-	3.70	3.60	3.15	4.45	6.30	1.95	7.72	9.96	14.09	390	960
	422. 766	-	○	-	CE	-	-	-	4.15	4.10	4.00	5.66	8.00	2.48	9.80	12.65	17.89	390	960
	422. 806	○	-	-	CE	-	-	-	4.65	4.60	5.00	7.07	10.00	3.10	12.25	15.81	22.36	390	960
	422. 846	○	○	-	CE	-	-	-	5.20	5.10	6.25	8.84	12.50	3.88	15.31	19.76	27.95	390	960
	422. 886	○	○	-	CE	-	-	-	5.80	5.70	8.00	11.31	16.00	4.96	19.60	25.30	35.78	390	960
	422. 966	-	○	-	-	CG	-	-	8.00	8.00	12.50	17.68	25.00	7.75	30.62	39.53	55.90	390	960
120°	422. 488	○	-	CC	-	-	-	-	1.90	1.80	0.80	1.13	1.60	0.50	1.96	2.53	3.58	680	1220
	422. 568	○	○	CC	-	-	-	-	2.30	2.20	1.25	1.77	2.50	0.78	3.06	3.95	5.59	680	1220
	422. 608	○	-	-	CE	-	-	-	2.60	2.50	1.57	2.23	3.15	0.98	3.86	4.98	7.04	680	1600
	422. 728	○	○	-	CE	-	-	-	3.70	3.60	3.15	4.45	6.30	1.95	7.72	9.96	14.09	680	1600
	422. 808	-	○	-	CE	-	-	-	4.65	4.60	5.00	7.07	10.00	3.10	12.25	15.81	22.36	680	1600
	422. 848	○	○	-	CE	-	-	-	5.20	5.10	6.25	8.84	12.50	3.88	15.31	19.76	27.95	680	1600
	422. 888	○	○	-	CE	-	-	-	5.80	5.70	8.00	11.31	16.00	4.96	19.60	25.30	35.78	680	1600
	422. 928	-	○	-	-	CG	-	-	7.30	7.30	10.00	14.14	20.00	6.20	24.49	31.62	44.72	680	1600
	422. 968	○	○	-	-	CG	-	-	8.00	8.00	12.50	17.68	25.00	7.75	30.62	39.53	55.90	680	1600
	423. 008	-	○	-	-	CG	-	-	8.70	8.70	15.75	22.27	31.50	9.77	38.88	49.81	70.44	680	1600
	423.128	-	○	-	-	-	CK	-	12.70	12.30	31.50	44.55	63.00	19.54	77.16	99.61	140.87	680	1600
	423.208	-	○	-	-	-	-	CM	19.00	16.00	50.00	70.71	100.00	31.00	122.47	158.11	223.61	680	1600

[1] We reserve the right to deliver AISI 316Ti or AISI 316L under the material no. 17.
B = Bore diameter · E = Narrowest free cross section

Example for ordering:	Type	+	Material-no.	+	Code	=	Ordering no.
	422. 644	+	30	+	CE	=	422. 644. 30. CE

Plastic version see next page.

Conversion formula for the above series: $\dot{V}_2 = \dot{V}_1 * \sqrt{\frac{p_2}{p_1}}$

Tangential-flow full cone nozzles
Plastic version
Series 422 / 423

Tangentially arranged liquid supply. Without swirl inserts. Non-clogging. Stable spray angle. Uniform spray.
Applications:
Cleaning and washing processes, surface spraying, bottle cleaning, keg cleaning, sausage showers, foam control, degassing, pasteurization.

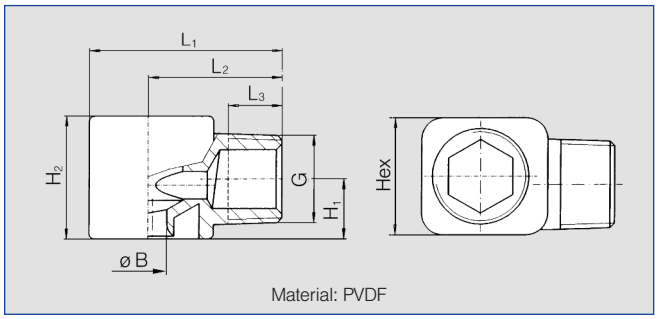

Dimensions [mm]							Weight PVDF
G	L_1	L_2	L_3	H_1	H_2	Hex	
1/4 BSPT	28.0	20.0	9.8	8.0	16.0	16.0	7 g
3/8 BSPT	36.0	25.0	10.1	11.2	23.0	22.0	16 g
1/2 BSPT	49.5	33.5	13.2	19.2	38.0	32.0	40 g
3/4 BSPT	58.5	38.5	18.5	24.5	50.0	41.0	50 g

Spray angle	Ordering no. Type	Mat. Nr. 5E PVDF	Code 1/4 BSPT	Code 3/8 BSPT	Code 1/2 BSPT	Code 3/4 BSPT	B Ø [mm]	E Ø [mm]	V̇ [l/min] p [bar] 0.5	1.0	2.0	[US gal./min] at 40 psi	3.0	5.0	10.0	Spray diameter D at p=1-10 bar H = 200 mm	H = 500 mm
60°	422. 724	○	-	CE	-	-	3.60	3.60	3.15	4.45	6.30	1.95	7.72	9.96	14.09	225	510
90°	422. 406	○	CC	-	-	-	1.50	1.45	0.50	0.71	1.00	0.31	1.22	1.58	2.24	380	860
	422. 566	○	CC	-	-	-	2.30	2.20	1.25	1.77	2.50	0.78	3.06	3.95	5.59	380	860
	422. 606	○	-	CE	-	-	2.60	2.50	1.57	2.23	3.15	0.98	3.86	4.98	7.04	380	860
	422. 646	○	-	CE	-	-	3.00	2.90	2.00	2.83	4.00	1.24	4.90	6.32	8.94	390	960
	422. 726	○	-	CE	-	-	3.70	3.60	3.15	4.45	6.30	1.95	7.72	9.96	14.09	390	960
	422. 806	○	-	CE	-	-	4.65	4.60	5.00	7.07	10.00	3.10	12.25	15.81	22.36	390	960
	422. 846	○	-	CE	-	-	5.20	5.10	6.25	8.84	12.50	3.88	15.31	19.76	27.95	390	960
	422. 886	○	-	CE	-	-	5.80	5.70	8.00	11.31	16.00	4.96	19.60	25.30	35.78	390	960
	422. 926	○	-	-	CG	-	7.30	7.30	10.00	14.14	20.00	6.20	24.49	31.62	44.72	390	960
	422. 966	○	-	-	CG	-	8.00	8.00	12.50	17.68	25.00	7.75	30.62	39.53	55.90	390	960
	423. 006	○	-	-	CG	-	8.70	8.70	15.75	22.27	31.50	9.77	38.58	49.81	70.44	390	960
	423. 126	○	-	-	-	CK	12.00	12.00	31.50	44.55	63.00	19.54	77.16	99.61	140.87	390	960
120°	422. 408	○	CC	-	-	-	1.50	1.45	0.50	0.71	1.00	0.31	1.22	1.58	2.24	680	1220
	422. 448	○	CC	-	-	-	1.65	1.60	0.62	0.88	1.25	0.39	1.53	1.98	2.80	680	1220
	422. 488	○	CC	-	-	-	1.90	1.80	0.80	1.13	1.60	0.50	1.96	2.53	3.58	680	1220
	422. 568	○	CC	-	-	-	2.30	2.20	1.25	1.77	2.50	0.78	3.06	3.95	5.59	680	1220
	422. 728	○	-	CE	-	-	3.70	3.60	3.15	4.45	6.30	1.95	7.72	9.96	14.09	680	1600
	422. 888	○	-	CE	-	-	5.80	5.70	8.00	11.31	16.00	4.96	19.60	25.30	35.78	680	1600
	422. 968	○	-	-	CG	-	8.00	8.00	12.50	17.68	25.00	7.75	30.62	39.53	55.90	680	1600
	423. 008	○	-	-	CG	-	8.70	8.70	15.75	22.27	31.50	9.77	38.58	49.81	70.44	680	1600
	423. 128	○	-	-	-	CK	12.70	12.30	31.50	44.55	63.00	19.54	77.16	99.61	140.87	680	1600

B = Bore diameter · E = Narrowest free cross section

Example of ordering:	Type	+	Material-no.	+	Code	=	Ordering no.
	422. 724	+	5E	+	CE	=	422. 724. 5E. CE

Conversion formula for the above series: $\dot{V}_2 = \dot{V}_1 * \sqrt{\frac{p_2}{p_1}}$

Flat fan nozzles

Series 632 / 633

(Mat. no. 16 / 17 / 5E)

Standard design with conical, self-sealing thread connection. Stable spray angle. Uniform, parabolical distribution of liquid. Spray pipes equiped with these nozzles show an extremely uniform total distribution of liquid.
Applications:
Cleaning (e.g. surfaces, filters, belts), crate washers, lubricating, coating.

AISI 303/ AISI 316Ti/Brass (∢ 20°-75°)

AISI 303/ AISI 316Ti/Brass (∢ 90°-120°)

PVDF

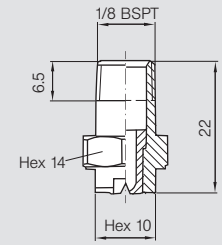

Weight Brass: 17 g

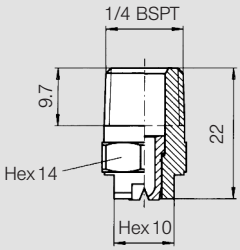

Weight Brass: 20 g

Version with short length on request.

3/8" or 1/2" version

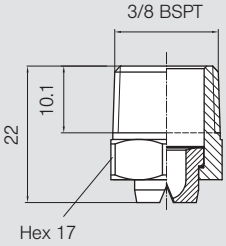

Weight Brass: 30 g

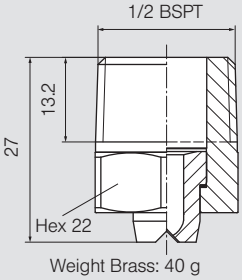

Weight Brass: 40 g

Spray angle ∢	Ordering no. Type	Material-no. 16[1] AISI 303/AISI 304	17[2] AISI 316Ti/AISI 316L	30 Brass	5E PVDF	Code 1/8 BSPT	1/4 BSPT	3/8 BSPT	1/2 BSPT	A Ø [mm]	E Ø [mm]	V̇ [l/min] p [bar] 0.5	1.0	2.0	3.0	5.0	7.0	10.0	Spray width B at p = 2 bar H= 250 mm	H= 500 mm
20°	632. 301	○	○	○	○	CA	CC	-	-	0.70	0.60	0.16*	0.23*	0.32	0.39	0.51	0.60	0.72	65	120
	632. 361	○	○	○	○	CA	CC	-	-	1.00	0.80	0.31*	0.44*	0.63	0.77	1.00	1.18	1.40	70	130
	632. 441	○	○	○	○	CA	CC	-	-	1.35	1.10	0.62*	0.88	1.25	1.53	1.98	2.34	2.80	75	145
	632. 481	○	○	○	○	CA	CC	-	-	1.50	1.20	0.80*	1.13	1.60	1.96	2.53	2.99	3.58	75	150
30°	632. 302	○	○	○	○	CA	CC	-	-	0.60	0.50	0.16*	0.23*	0.32	0.39	0.51	0.60	0.72	120	235
	632. 362	○	○	○	○	CA	CC	-	-	1.00	0.70	0.31*	0.44*	0.63	0.77	1.00	1.18	1.40	120	235
	632. 402	○	○	○	○	CA	CC	-	-	1.20	0.90	0.50*	0.71	1.00	1.23	1.58	1.87	2.24	120	235
	632. 482	○	○	○	○	CA	CC	-	-	1.50	1.10	0.80*	1.13	1.60	1.96	2.53	2.99	3.58	120	235
	632. 562	○	○	○	○	CA	CC	-	-	2.00	1.50	1.25	1.77	2.50	3.06	3.95	4.68	5.59	120	235
	632. 642	○	○	○	-	-	CC	-	-	2.50	1.80	2.00	2.83	4.00	4.90	6.33	7.48	8.94	120	240
	632. 722	○	○	○	-	-	CC	-	-	3.00	2.40	3.15	4.46	6.30	7.72	9.96	11.79	14.09	125	240
	632. 762	○	○	○	-	-	CC	-	-	3.50	2.70	4.00	5.66	8.00	9.80	12.65	14.97	17.89	125	240
	632. 802	○	○	○	-	-	CC	-	-	4.00	3.10	5.00	7.07	10.00	12.25	15.81	18.71	22.36	130	250

[1] We reserve the right to deliver AISI 303 or AISI 304 under the material no. 16.
[2] We reserve the right to deliver AISI 316Ti or AISI 316L under the material no. 17.
A = Equivalent bore diameter · E = Narrowest free cross section
*Differing spray pattern
Subject to technical modifications.

Continued on next page.

Example for ordering:	Type	+	Material-no.	+	Code	=	Ordering no.
	632. 301	+	16	+	CA	=	632. 301. 16. CC

Conversion formula for the above series: $\dot{V}_2 = \dot{V}_1 * \sqrt{\frac{p_2}{p_1}}$

Flat fan nozzles

Series 632 / 633

Spray angle	Ordering no. Type	Material-no. 16[1] AISI 303/AISI 304	17[2] AISI 316Ti/AISI 316L	30 Brass	5E PVDF	Code 1/8 BSPT	1/4 BSPT	3/8 BSPT	1/2 BSPT	A Ø [mm]	E Ø [mm]	V̇ [l/min] p [bar] 0.5	1.0	2.0	3.0	5.0	7.0	10.0	Spray width B at p = 2 bar H= 250 mm	H= 500 mm
45°	632. 303	○	○	○	-	CA	CC	-	-	0.70	0.50	0.16*	0.23*	0.32	0.39	0.51	0.60	0.72	150	270
	632. 363	○	○	○	○	CA	CC	-	-	1.00	0.60	0.31*	0.44*	0.63	0.77	1.00	1.18	1.40	155	280
	632. 403	○	○	○	○	CA	CC	-	-	1.20	0.90	0.50*	0.71	1.00	1.23	1.58	1.87	2.24	175	320
	632. 483	○	○	○	○	CA	CC	-	-	1.50	1.10	0.80*	1.13	1.60	1.96	2.53	2.99	3.58	180	340
	632. 563	○	○	○	○	CA	CC	-	-	2.00	1.40	1.25	1.77	2.50	3.06	3.95	4.68	5.59	185	355
	632. 643	○	○	○	○	CA	CC		-	2.50	1.80	2.00	2.83	4.00	4.90	6.33	7.48	8.94	195	370
	632. 673	○	○	○	-	-	CC	CE	-	2.70	2.00	2.83	3.36	4.75	5.82	7.51	8.89	10.62	200	375
	632. 723	○	○	○	-	-	CC	CE	-	3.00	2.40	3.15	4.46	6.30	7.72	9.96	11.79	14.09	200	375
	632. 763	○	○	○	-	-	CC	CE	-	3.50	2.60	4.00	5.66	8.00	9.80	12.65	14.97	17.89	200	380
	632. 803	○	○	○	-	-	CC	CE	CG	4.00	3.00	5.00	7.07	10.00	12.25	15.81	18.71	22.36	205	385
	632. 843	○	○***	○	-	-	CC	-	CG	4.50	3.40	6.25	8.84	12.50	15.31	19.76	23.39	27.95	205	385
	632. 883	○	○	○	-	-	-	-	CG	5.00	3.80	8.00	11.31	16.00	19.60	25.30	29.93	35.78	220	440
	632. 923	○	○	○	-	-	-	-	CG	5.50	4.20	10.00	14.14	20.00	24.50	31.62	37.42	44.72	220	440
	632. 963	○	○	○	-	-	-	-	CG	6.00	4.40	12.50	17.68	25.00	30.62	39.53	46.77	55.90	220	440
60°	632. 304	○	○	○	○	CA	CC	-	-	0.70	0.40	0.16*	0.23*	0.32	0.39	0.51	0.60	0.72	215	425
	632. 334	○	○	○	○	CA	CC	-	-	0.90	0.50	0.22*	0.32*	0.45	0.55	0.71	0.84	1.01	220	440
	632. 364	○	○	○	○	CA	CC	-	-	1.00	0.60	0.31*	0.44*	0.63	0.77	1.00	1.18	1.40	230	460
	632. 404	○	○	○	○	CA	CC	-	-	1.20	0.80	0.50*	0.71	1.00	1.23	1.58	1.87	2.24	245	485
	632. 444	○	○	○	○	CA	CC	-	-	1.35	0.90	0.62*	0.88	1.25	1.53	1.98	2.34	2.80	255	495
	632. 484	○	○	○	○	CA	CC	-	-	1.50	1.00	0.80*	1.13	1.60	1.96	2.53	2.99	3.58	260	510
	632. 514	○	○	○	○	CA	CC	-	-	1.65	1.10	0.95*	1.34	1.90	2.33	3.00	3.56	4.25	270	520
	632. 564	○	○	○	○	CA	CC	-	-	2.00	1.30	1.25	1.77	2.50	3.06	3.95	4.68	5.59	280	535
	632. 604	○	○	○	○	CA	CC	-	-	2.20	1.50	1.58	2.23	3.15	3.86	4.98	5.89	7.04	290	550
	632. 644	○	○	○	○**	-	CC	CE	-	2.50	1.60	2.00	2.83	4.00	4.90	6.33	7.48	8.94	295	565
	632. 674	○	○	○	○**	-	CC	CE	-	2.70	1.80	2.38	3.36	4.75	5.82	7.51	8.89	10.62	300	575
	632. 724	○	○	○	○**	-	CC	CE	-	3.00	2.10	3.15	4.46	6.30	7.72	9.96	11.79	14.09	305	590
	632. 764	○	○	○	-	-	CC	CE	-	3.50	2.30	4.00	5.66	8.00	9.80	12.65	14.97	17.89	310	595
	632. 804	○	○***	○	○**	-	CC	-	CG	4.00	2.60	5.00	7.07	10.00	12.25	15.81	18.71	22.36	310	595
	632. 844	○	○***	○	○**	-	CC	-	CG	4.50	3.00	6.25	8.84	12.50	15.31	19.76	23.39	27.95	310	590
	632. 884	○	○***	○	○**	-	CC	-	CG	5.00	3.40	8.00	11.31	16.00	19.60	25.30	29.93	35.78	300	570
	632. 924	○	○	○	-	-	-	-	CG	5.50	4.10	10.00	14.14	20.00	24.50	31.62	37.42	44.72	330	630
	632. 964	○	○	○	-	-	-	-	CG	6.00	4.20	12.50	17.68	25.00	30.62	39.53	46.77	55.90	330	630
	633. 004	○	○	-	-	-	-	-	CG	7.00	4.80	15.75	22.27	31.50	38.57	49.80	58.92	70.43	330	630
	633. 044	○	○	○	-	-	-	-	CG	8.00	5.50	20.00	28.28	40.00	48.99	63.25	74.83	89.44	340	640
	633. 084	○	○	○	-	-	-	-	CG	9.00	6.80	25.00	35.36	50.00	61.24	79.06	93.54	111.80	340	640
75°	632. 145	○	-	○	-	CA	CC	-	-	0.20	0.12	-	0.04*	0.05	0.06	0.08	0.09	0.11	280	550
	632. 165	○	-	○	-	CA	CC	-	-	0.20	0.14	-	0.05*	0.07	0.08	0.10	0.12	0.15	290	560
	632. 185	○	-	○	-	CA	CC	-	-	0.20	0.16	-	0.06*	0.08	0.10	0.13	0.15	0.18	300	575
	632. 215	○	-	○	-	CA	CC	-	-	0.40	0.20	-	0.08*	0.11	0.14	0.18	0.21	0.25	300	580
	632. 245	○	-	○	-	CA	CC	-	-	0.50	0.30	-	0.12*	0.16	0.20	0.26	0.30	0.36	310	585
	632. 275	○	-	○	-	CA	CC	-	-	0.60	0.30	0.11*	0.16*	0.22	0.27	0.35	0.41	0.49	310	590

[1] We reserve the right to deliver AISI 303 or AISI 304 under the material no. 16.
[2] We reserve the right to deliver AISI 316Ti or AISI 316L under the material no. 17.
A = Equivalent bore diameter · E = Narrowest free cross section
*Differing spray pattern
**Only available with code CC.
***Only available with code CG.
Subject to technical modifications.

Continued on next page.

Example for ordering:	Type	+	Material-no.	+	Code	=	Ordering no.
	632. 303.	+	16	+	CA	=	632. 303. 16. CA

Conversion formula for the above series: $\dot{V}_2 = \dot{V}_1 * \sqrt{\frac{p_2}{p_1}}$

Flat fan nozzles

Series 632 / 633

Spray angle	Ordering no. Type	Material-no. 16[1] AISI 303/AISI 304	17[2] AISI 316Ti/AISI 316L	30 Brass	5E PVDF	Code 1/8 BSPT	1/4 BSPT	3/8 BSPT	1/2 BSPT	A Ø [mm]	E Ø [mm]	V̇ [l/min] p [bar] 0.5	1.0	2.0	3.0	5.0	7.0	10.0	Spray width B at p = 2 bar H= 250 mm	H= 500 mm
90°	632. 216	○	-	○	-	CA	CC	-	-	0.40	0.20	-	0.08*	0.11	0.14	0.18	0.21	0.25	370	700
	632. 276	○	-	○	-	CA	CC	-	-	0.60	0.30	0.11*	0.16*	0.22	0.27	0.35	0.41	0.49	375	720
	632. 306	○	○	○	○	CA	CC	-	-	0.70	0.40	0.16*	0.23*	0.32	0.39	0.51	0.60	0.72	380	740
	632. 336	○	○	○	○	CA	CC	-	-	0.90	0.50	0.22*	0.32*	0.45	0.55	0.71	0.84	1.01	415	800
	632. 366	○	○	○	○	CA	CC	-	-	1.00	0.50	0.31*	0.44*	0.63	0.77	1.00	1.18	1.41	420	810
	632. 406	○	○	○	○	CA	CC	-	-	1.20	0.70	0.50*	0.71	1.00	1.23	1.58	1.87	2.24	430	820
	632. 446	○	○	○	○	CA	CC	-	-	1.35	0.80	0.62*	0.88	1.25	1.53	1.98	2.34	2.80	435	830
	632. 486	○	○	○	○	CA	CC	-	-	1.50	0.80	0.80*	1.13	1.60	1.96	2.53	2.99	3.58	440	835
	632. 516	○	○	○	○	CA	CC	-	-	1.65	0.90	0.95*	1.34	1.90	2.33	3.00	3.56	4.25	440	840
	632. 566	○	○	○	○	CA	CC	-	-	2.00	1.10	1.25	1.77	2.50	3.06	3.95	4.68	5.59	445	850
	632. 606	○	○	○	○	CA	CC	-	-	2.20	1.20	1.58	2.23	3.15	3.86	4.98	5.89	7.04	450	860
	632. 646	○	○	○	○**	-	CC	CE	-	2.50	1.30	2.00	2.83	4.00	4.90	6.33	7.48	8.94	455	865
	632. 676	○	○	○	○**	-	CC	CE	-	2.70	1.40	2.38	3.36	4.75	5.82	7.51	8.89	10.62	465	875
	632. 726	○	○	○	○**	-	CC	CE	-	3.00	1.70	3.15	4.46	6.30	7.72	9.96	11.79	14.09	470	885
	632. 766	○	○	○	○**	-	CC	CE	-	3.50	1.90	4.00	5.66	8.00	9.80	12.65	14.97	17.89	475	890
	632. 806	○	○***	○	○**	-	CC	-	CG	4.00	2.40	5.00	7.07	10.00	12.25	15.81	18.71	22.36	480	900
	632. 846	○	○***	○	○**	-	CC	-	CG	4.50	2.40	6.25	8.84	12.50	15.31	19.76	23.39	27.95	480	900
	632. 886	○	○***	○	○**	-	CC	-	CG	5.00	3.10	8.00	11.31	16.00	19.60	25.30	29.93	35.78	480	910
	632. 926	○	○	○	-	-	-	-	CG	5.50	3.60	10.00	14.14	20.00	24.50	31.62	37.42	44.72	525	1020
	632. 966	○	○	○	-	-	-	-	CG	6.00	3.90	12.50	17.68	25.00	30.62	39.53	46.77	55.90	525	1020
120°	632. 187	○	-	○	-	CA	CC	-	-	0.35	0.20	-	0.06*	0.08	0.10	0.13	0.15	0.18	630	1200
	632. 217	○	-	○	-	CA	CC	-	-	0.40	0.20	-	0.08*	0.11	0.14	0.18	0.21	0.25	640	1210
	632. 247	○	-	○	-	CA	CC	-	-	0.50	0.20	-	0.12*	0.16	0.20	0.26	0.30	0.36	650	1230
	632. 277	○	-	○	-	CA	CC	-	-	0.60	0.30	-	0.16*	0.22	0.27	0.35	0.41	0.49	660	1250
	632. 307	○	○	○	○	CA	CC	-	-	0.70	0.30	0.16*	0.23*	0.32	0.39	0.51	0.60	0.72	660	1250
	632. 337	○	○	○	○	CA	CC	-	-	0.90	0.40	0.22*	0.32*	0.45	0.55	0.71	0.84	1.01	670	1270
	632. 367	○	○	○	○	CA	CC	-	-	1.00	0.50	0.31*	0.44*	0.63	0.77	1.00	1.18	1.41	670	1270
	632. 407	○	○	○	○	CA	CC	-	-	1.20	0.60	0.50*	0.71	1.00	1.23	1.58	1.87	2.24	670	1270
	632. 447	○	○	○	○	CA	CC	-	-	1.35	0.60	0.62*	0.88	1.25	1.53	1.98	2.34	2.80	675	1270
	632. 487	○	○	○	○	CA	CC	-	-	1.50	0.60	0.80*	1.13	1.60	1.96	2.53	2.99	3.58	680	1275
	632. 517	○	○	○	○	CA	CC	-	-	1.65	0.90	0.95*	1.34	1.90	2.33	3.00	3.56	4.25	685	1280
	632. 567	○	○	○	○	CA	CC	-	-	2.00	0.90	1.25	1.77	2.50	3.06	3.95	4.68	5.59	690	1285
	632. 607	○	○	○	○	CA	CC	-	-	2.20	1.10	1.58	2.23	3.15	3.86	4.98	5.89	7.04	700	1300
	632. 647	○	○	○	-	-	CC	CE	-	2.50	1.30	2.00	2.83	4.00	4.90	6.33	7.48	8.94	700	1300
	632. 677	○	○	○	○**	-	CC	CE	-	2.70	1.40	2.38	3.36	4.75	5.82	7.51	8.89	10.62	720	1330
	632. 727	○	○	○	○**	-	CC	CE	-	3.00	1.60	3.15	4.46	6.30	7.72	9.96	11.79	14.09	740	1360
	632. 767	○	○	○	○**	-	CC	CE	-	3.50	1.70	4.00	5.66	8.00	9.80	12.65	14.97	17.89	760	1400
	632. 807	○	○***	○	-	-	CC	-	CG	4.00	2.00	5.00	7.07	10.00	12.25	15.81	18.71	22.36	790	1450
	632. 847	○***	○***	○***	○**	-	CC	-	CG	4.50	2.30	6.25	8.84	12.50	15.31	19.76	23.39	27.95	790	1450
	632. 887	○	○	○	-	-	-	-	CG	5.00	2.60	8.00	11.31	16.00	19.60	25.30	29.93	35.78	800	1460
	632. 927	○	○	○	-	-	-	-	CG	5.00	2.90	10.00	14.14	20.00	24.50	31.62	37.42	44.72	800	1460

[1] We reserve the right to deliver AISI 303 or AISI 304 under the material no. 16.
[2] We reserve the right to deliver AISI 316Ti or AISI 316L under the material no. 17.
A = Equivalent bore diameter · E = Narrowest free cross section
*Differing spray pattern
**Only available with code CC.
***Only available with code CG.
Subject to technical modifications.

Example for ordering:	Type	+ Material-no.	+ Code	= Ordering no.
	632. 216.	+ 16	+ CA	= 632. 216. 16. CA

Conversion formula for the above series: $\dot{V}_2 = \dot{V}_1 * \sqrt{\frac{p_2}{p_1}}$

Flat fan nozzles for retaining nut Series 652

(Mat. no. 16 / 17 / 5E)

Assembly with retaining nut. Easy nozzle changing, simple jet alignment. Uniform, parabolic distribution of liquid. Spray pipes equiped with these nozzles show an extremely uniform total liquid distribution.
Applications:
Cleaning (e.g. surfaces, filters, belts), crate washers, lubricating, coating.

AISI 303/AISI 316Ti/Brass (∢ 20°-75°) | AISI 303/AISI 316Ti/Brass (∢ 90°-120°) | PVDF

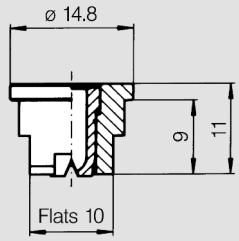

Weight Brass: 9 g

Spray angle ∢	Ordering no. Type	Material-no. 16 AISI 303	17[1] AISI 316Ti/ AISI 316L	30 Brass	5E PVDF	A Ø [mm]	E Ø [mm]	V̇ [l/min] p [bar] 0.5	1.0	2.0	[US gal./ min] at 40 psi	3.0	5.0	10.0	Spray width B at p = 2 bar H = 250 mm	H = 500 mm
20°	652. 301	○	○	○	○	0.70	0.60	0.16*	0.23*	0.32	0.10	0.39	0.51	0.72	65	125
	652. 361	○	○	○	○	1.00	0.80	0.31*	0.44*	0.63	0.20	0.77	1.00	1.40	65	125
	652. 441	○	○	○	○	1.35	1.10	0.62*	0.88	1.25	0.39	1.53	1.98	2.80	65	125
	652. 481	○	○	○	○	1.50	1.20	0.80*	1.13	1.60	0.50	1.96	2.53	3.58	65	125
30°	652. 302	○	○	○	○	0.60	0.50	0.16*	0.23*	0.32	0.10	0.39	0.51	0.72	115	230
	652. 362	○	○	○	○	1.00	0.70	0.31*	0.44*	0.63	0.20	0.77	1.00	1.40	115	230
	652. 402	○	○	○	○	1.20	0.90	0.50*	0.71	1.00	0.31	1.23	1.58	2.24	115	230
	652. 482	○	○	○	○	1.50	1.10	0.80*	1.13	1.60	0.50	1.96	2.53	3.58	115	230
	652. 562	○	○	○	○	2.00	1.50	1.25	1.77	2.50	0.78	3.06	3.95	5.59	115	230
	652. 642	○	○	○	-	2.50	1.80	2.00	2.83	4.00	1.24	4.90	6.33	8.94	120	230
	652. 722	○	○	○	-	3.00	2.40	3.15	4.46	6.30	1.95	7.72	9.96	14.09	120	235
	652. 762	○	○	○	-	3.50	2.70	4.00	5.66	8.00	2.48	9.80	12.65	17.89	120	235
	652. 802	○	○	○	-	4.00	3.10	5.00	7.07	10.00	3.10	12.25	15.81	22.36	120	240
45°	652. 303	○	○	○	-	0.70	0.50	0.16*	0.23*	0.32	0.10	0.39	0.51	0.72	180	340
	652. 363	○	○	○	○	1.00	0.60	0.31*	0.44*	0.63	0.20	0.77	1.00	1.40	185	340
	652. 403	○	○	○	○	1.20	0.90	0.50*	0.71	1.00	0.31	1.23	1.58	2.24	185	340
	652. 483	○	○	○	○	1.50	1.10	0.80*	1.13	1.60	0.50	1.96	2.53	3.58	185	340
	652. 563	○	○	○	○	2.00	1.40	1.25	1.77	2.50	0.78	3.06	3.95	5.59	185	340
	652. 643	○	○	○	○	2.50	1.80	2.00	2.83	4.00	1.24	4.90	6.33	8.94	185	345
	652. 723	○	○	○	-	3.00	2.40	3.15	4.46	6.30	1.95	7.72	9.96	14.09	190	355
	652. 763	○	○	○	-	3.50	2.60	4.00	5.66	8.00	2.48	9.80	12.65	17.89	190	355
	652. 803	○	○	○	-	4.00	3.00	5.00	7.07	10.00	3.10	12.25	15.81	22.36	195	360
60°	652. 304	○	○	○	○	0.70	0.40	0.16*	0.23*	0.32	0.10	0.39	0.51	0.72	275	525
	652. 334	○	○	○	○	0.90	0.50	0.22*	0.32*	0.45	0.14	0.55	0.71	1.01	275	525
	652. 364	○	○	○	○	1.00	0.60	0.31*	0.44*	0.63	0.20	0.77	1.00	1.40	275	525
	652. 404	○	○	○	○	1.20	0.80	0.50*	0.71	1.00	0.31	1.23	1.58	2.24	275	525
	652. 444	○	○	○	○	1.35	0.90	0.62*	0.88	1.25	0.39	1.53	1.98	2.80	280	530
	652. 484	○	○	○	○	1.50	1.00	0.80*	1.13	1.60	0.50	1.96	2.53	3.58	280	530
	652. 514	○	○	○	○	1.65	1.10	0.95*	1.34	1.90	0.59	2.33	3.00	4.25	280	530
	652. 564	○	○	○	○	2.00	1.30	1.25	1.77	2.50	0.78	3.06	3.95	5.59	280	525
	652. 604	○	○	○	○	2.20	1.50	1.58	2.23	3.15	0.98	3.86	4.98	7.04	280	520
	652. 644	○	○	○	○	2.50	1.60	2.00	2.83	4.00	1.24	4.90	6.33	8.94	275	520
	652. 674	○	○	○	○	2.70	1.80	2.38	3.36	4.75	1.47	5.82	7.51	10.62	275	520
	652. 724	○	○	○	○	3.00	2.10	3.15	4.46	6.30	1.95	7.72	9.96	14.09	275	520
	652. 764	○	○	○	-	3.50	2.30	4.00	5.66	8.00	2.48	9.80	12.65	17.89	270	515
	652. 804	○	○	○	○	4.00	2.60	5.00	7.07	10.00	3.10	12.25	15.81	22.36	270	510
	652. 844	○	-	-	○	4.50	3.00	6.25	8.84	12.50	3.88	15.31	19.76	27.95	270	510
	652. 884	○	-	○	-	5.00	3.40	8.00	11.31	16.00	4.96	19.60	25.30	35.78	270	505

[1] We reserve the right to deliver AISI 316Ti or AISI 316L under the material no. 17.
A = Equivalent bore diameter · E = Narrowest free cross section · *Differing spray pattern.

Continued on next page.

Conversion formula for the above series: $\dot{V}_2 = \dot{V}_1 * \sqrt{\frac{p_2}{p_1}}$

Flat fan nozzles for retaining nut Series 652

Spray angle	Ordering no. Type	Material-no. 16 AISI 303	17[1] AISI 316Ti/ AISI 316L	30 Brass	5E PVDF	A Ø [mm]	E Ø [mm]	$\dot{V}$ [l/min] p [bar] [US gal./min] at 40 psi 0.5	1.0	2.0	3.0	5.0	10.0	Spray width B at p = 2 bar H = 250 mm	H = 500 mm
75°	652. 145	○	-	○	-	0.20	0.12	-	0.04*	0.05	0.02	0.06	0.08	0.11	285	550
	652. 165	○	-	○	-	0.20	0.14	-	0.05*	0.07	0.02	0.08	0.10	0.15	285	555
	652. 185	○	-	○	-	0.20	0.16	-	0.06*	0.08	0.02	0.10	0.13	0.18	290	560
	652. 215	○	-	○	-	0.40	0.20	-	0.08*	0.11	0.03	0.14	0.18	0.25	290	560
	652. 245	○	-	○	-	0.50	0.30	-	0.12*	0.16	0.05	0.20	0.26	0.36	290	560
	652. 275	○	-	○	-	0.60	0.30	0.11*	0.16*	0.22	0.07	0.27	0.35	0.49	290	560
90°	652. 216	○	-	○	-	0.40	0.20	0.06*	0.08*	0.11	0.03	0.14	0.18	0.25	380	760
	652. 246	○	-	○	-	0.50	0.30	0.08*	0.12*	0.16	0.05	0.20	0.26	0.36	380	760
	652. 276	○	-	○	-	0.60	0.30	0.11*	0.16*	0.22	0.07	0.27	0.35	0.49	450	795
	652. 306	○	○	○	○	0.70	0.40	0.16*	0.23*	0.32	0.10	0.39	0.51	0.72	450	795
	652. 336	○	○	○	○	0.90	0.50	0.22*	0.32*	0.45	0.14	0.55	0.71	1.01	450	795
	652. 366	○	○	○	○	1.00	0.50	0.31*	0.44*	0.63	0.20	0.77	1.00	1.41	450	795
	652. 406	○	○	○	○	1.20	0.70	0.50*	0.71	1.00	0.31	1.23	1.58	2.24	450	800
	652. 446	○	○	○	○	1.35	0.80	0.62*	0.88	1.25	0.39	1.53	1.98	2.80	450	800
	652. 486	○	○	○	○	1.50	0.80	0.80*	1.13	1.60	0.50	1.96	2.53	3.58	450	800
	652. 516	○	○	○	○	1.65	0.90	0.95*	1.34	1.90	0.59	2.33	3.00	4.25	450	800
	652. 566	○	○	○	○	2.00	1.10	1.25	1.77	2.50	0.78	3.06	3.95	5.59	450	805
	652. 606	○	○	○	○	2.20	1.20	1.58	2.23	3.15	0.98	3.86	4.98	7.04	450	805
	652. 646	○	○	○	○	2.50	1.30	2.00	2.83	4.00	1.24	4.90	6.33	8.94	450	805
	652. 676	○	○	○	○	2.70	1.40	2.38	3.36	4.75	1.47	5.82	7.51	10.62	450	810
	652. 726	○	○	○	○	3.00	1.70	3.15	4.46	6.30	1.95	7.72	9.96	14.09	450	810
	652. 766	○	○	○	-	3.50	1.90	4.00	5.66	8.00	2.48	9.80	12.65	17.89	450	815
	652. 806	○	○	○	○	4.00	2.40	5.00	7.07	10.00	3.10	12.25	15.81	22.36	450	820
	652. 846	-	-	○	○	4.50	2.40	6.25	8.84	12.50	3.88	15.31	19.76	27.95	450	820
	652. 886	○	-	○	○	5.00	3.10	8.00	11.31	16.00	4.96	19.60	25.30	35.78	450	835
120°	652. 187	○	-	○	-	0.35	0.20	-	0.06*	0.08	0.02	0.10	0.13	0.18	640	1220
	652. 217	○	-	○	-	0.40	0.20	-	0.08*	0.11	0.03	0.14	0.18	0.25	650	1230
	652. 247	○	-	○	-	0.50	0.20	-	0.12*	0.16	0.05	0.20	0.26	0.36	655	1245
	652. 277	○	-	○	-	0.60	0.30	-	0.16*	0.22	0.07	0.27	0.35	0.49	655	1250
	652. 307	○	-	○	○	0.70	0.30	0.16*	0.23*	0.32	0.10	0.39	0.51	0.72	660	1260
	652. 337	○	○	○	○	0.90	0.40	0.22*	0.32*	0.45	0.14	0.55	0.71	1.01	660	1260
	652. 367	○	○	○	○	1.00	0.50	0.31*	0.44*	0.63	0.20	0.77	1.00	1.41	660	1265
	652. 407	○	○	○	○	1.20	0.60	0.50*	0.71	1.00	0.31	1.23	1.58	2.24	660	1270
	652. 447	○	○	○	○	1.35	0.60	0.62*	0.88	1.25	0.39	1.53	1.98	2.80	665	1270
	652. 487	○	○	○	○	1.50	0.60	0.80*	1.13	1.60	0.50	1.96	2.53	3.58	665	1270
	652. 517	○	○	○	○	1.65	0.90	0.95*	1.34	1.90	0.59	2.33	3.00	4.25	670	1275
	652. 567	○	○	○	○	2.00	0.90	1.25	1.77	2.50	0.78	3.06	3.95	5.59	670	1280
	652. 607	○	○	○	○	2.20	1.10	1.58	2.23	3.15	0.98	3.86	4.98	7.04	675	1285
	652. 647	○	○	○	-	2.50	1.30	2.00	2.83	4.00	1.24	4.90	6.33	8.94	680	1295
	652. 677	○	○	○	-	2.70	1.40	2.38	3.36	4.75	1.47	5.82	7.51	10.62	685	1300
	652. 727	○	○	○	○	3.00	1.60	3.15	4.46	6.30	1.95	7.72	9.96	14.09	695	1315
	652. 767	○	○	○	-	3.50	1.70	4.00	5.66	8.00	2.48	9.80	12.65	17.89	705	1330
	652. 807	○	-	○	-	4.00	2.00	5.00	7.07	10.00	3.10	12.25	15.81	22.36	705	1330
	652. 847	-	-	-	○	4.50	2.30	6.25	8.84	12.50	3.88	15.31	19.76	27.95	800	1460
	652. 887	-	-	-	○	5.00	2.60	8.00	11.31	16.00	4.96	19.60	25.30	35.78	800	1460

[1] We reserve the right to deliver AISI 316Ti or AISI 316L under the material no. 17.
A = Equivalent bore diameter · E = Narrowest free cross section
*Differing spray pattern
Subject to technical modifications.

Example for ordering:	Type	+	Material-no.	=	Ordering no.
	652. 145	+	16	=	652. 145. 16

Conversion formula for the above series: $\dot{V}_2 = \dot{V}_1 * \sqrt{\frac{p_2}{p_1}}$

Flat fan nozzles for belt lubrication

Series 652. xxx. 8H. 03

Especially low flow rates.
Parabolic liquid distribution
Applications:
Belt lubrication, spraying of food products, oiling of metal sheets.

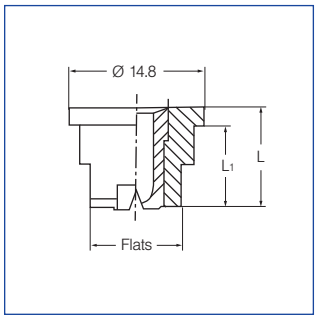

Operating pressure range:
1.0 to 5.0 bar

Recommended operating pressure:
3.0 bar

Viscosity:
The nozzles can be operated with viscous media, e. g. transmission fluid (max. approx. 200 mPas). However the spray angle decreases.

Return valve with gauze filter:
- Prevents dripping and saves medium
- Size of filter mesh: 0,08 mm (200 mesh)
- **095.016.53.11.00**
  Opening pressure: approx. 0.5 bar
  Closing pressure: approx. 0.3 bar
- **095.016.53.14.63**
  Opening pressure: approx. 2.8 bar
  Closing pressure: approx. 1.6 bar

Spray angle	Ordering no. Type	Mat.-no. 16 AISI 303	Mat.-no. 8H.03* POM/AISI 303	Colour	E Ø [mm]	V̇ [l/min] p [bar] 1.0	2.0	3.0	5.0
75°	652. 145	○	○	green	0.12	0.04**	0.05	0.06	0.08
	652. 165	○	○	black	0.14	0.05**	0.07	0.08	0.10
	652. 185	○	○	red	0.16	0.06**	0.08	0.10	0.13
	652. 215	○	○	blue	0.20	0.08**	0.11	0.14	0.18
	652. 245	○	○	orange	0.30	0.12**	0.16	0.20	0.26
	652.275	○	○	brown	0.30	0.16**	0.22	0.27	0.35
120°	652. 187	○	○	grey	0.20	0.06**	0.08	0.10	0.13
	652. 247	○	○	black	0.20	0.12**	0.16	0.20	0.26
	652. 277	○	○	black	0.30	0.16**	0.22	0.27	0.35

E = Narrowest free cross section
* Housing POM, nozzle insert AISI 303
** Differing spray pattern Subject to technical modifications.

Pos.	Name	Ordering no.	Material	Dimensions [mm] L	L1	Hex/ Flats	** [mm]
1	Gauze filter with return valve	095. 016. 53. 11. 00	PP	21	1.5	-	0.08
		095. 016. 53. 14. 63	PP	21	1.5	-	0.08
2	Gasket	065. 240. 55	PTFE	-	-	-	-
		065. 240. 72	EWP 210	-	-	-	-
3	Nozzle	Ordering no. see flow tables	AISI 303	11	9	10	-
			POM/AISI 303*	12	10	8	-
4	Cap nut	065. 200. 16	AISI 303	13	10	22	-
		065. 200. 56	POM	14.5	11.5	22	-

* Housing POM, Nozzle insert AISI 303
** Size of mesh

Position 1
Gauze filter with return valve

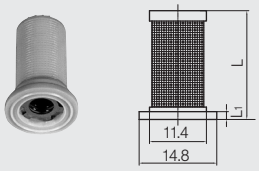

Position 2
Gasket

Position 3
Nozzle

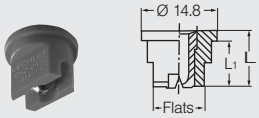

Position 4
Cap nut

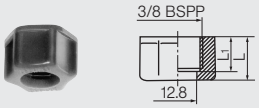

Conversion formula for the above series: $\dot{V}_2 = \dot{V}_1 * \sqrt{\frac{p_2}{p_1}}$

Tongue-type nozzles

Series 686

(Mat. no. 16 / 5E)

Wide flat fan with a sharply delimited jet pattern. Particularly clog-proof.
Applications:
Foam control in storage tanks, crate washers, cleaning and washing processes requiring powerful and concentrated water jets.

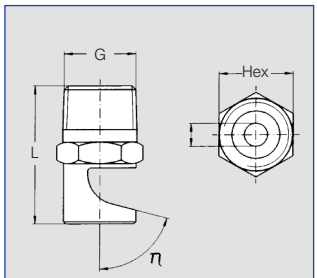

Weight Brass: 18 g

Spray angle	η	Ordering no. Type	Material-no. 16 AISI 303	30 Brass	5E PVDF	Code G 1/8 BSPT	1/4 BSPT	3/8 BSPT	1/2 BSPT	B Ø [mm]	V̇ [l/min] p [bar] 1.0	2.0	5.0	Dimensions L [mm] R 1/8	R 1/4	R 3/8	R 1/2	Hex [mm] R 1/8	R 1/4	R 3/8	R 1/2	Spray width B at p = 2 bar H = 250 mm
90°	53°	686. 366	-	○	-	CA	-	-	-	0.80	0.45	0.63	1.00	22	-	-	-	11	-	-	-	520
	75°	686. 406	○	○	-	CA	-	-	-	1.00	0.71	1.00	1.58	23	-	-	-	11	-	-	-	525
	40°	686. 686	○	○	-	-	CC	-	-	2.40	3.54	5.00	7.91	-	29	-	-	-	14	-	-	530
	40°	686. 726	-	○	-	CA	-	-	-	2.70	4.45	6.30	9.96	26	-	-	-	11	-	-	-	530
	40°	686. 806	○	○	-	-	CC	-	-	3.40	7.07	10.00	15.81	-	34	-	-	-	14	-	-	530
	40°	686. 886	○	-	-	-	CC	-	-	4.20	11.31	16.00	25.30	-	36	-	-	-	17	-	-	530
	40°	686. 926	○	-	-	-	-	CE	-	4.70	14.14	20.00	31.62	-	-	39	-	-	-	17	-	530
140°	75°	686. 368	○	○	-	CA	-	-	-	0.80	0.45	0.63	1.00	23	-	-	-	11	-	-	-	1360
		686. 408	○	○	-	CA	-	-	-	1.00	0.71	1.00	1.58	23	-	-	-	11	-	-	-	1370
		686. 448	○	○	-	-	CC	-	-	1.20	0.88	1.25	1.98	-	28	-	-	-	14	-	-	1370
		686. 488	○	○	-	CA	CC		-	1.30	1.13	1.60	2.53	23	28	-	-	11	14	-	-	1370
		686. 528	○	○	-	CA	CC	-	-	1.50	1.41	2.00	3.16	23	28	-	-	11	14	-	-	1370
		686. 568	○	○	○*	CA	CC	-	-	1.70	1.77	2.50	3.59	23	-	-	-	11	-	-	-	1370
		686. 608	○	○	-	CA	CC	-	-	1.90	2.23	3.15	4.98	23	28	-	-	11	14	-	-	1370
		686. 648	○	○	-	-	CC	-	-	2.20	2.83	4.00	6.32	-	28	-	-	-	14	-	-	1370
		686. 688	○	○	-	CA	CC	-	-	2.40	3.54	5.00	7.91	23	28	-	-	11	14	-	-	1370
		686. 728	○	○	-	CA	CC	-	-	2.70	4.45	6.30	9.96	23	-	-	-	11	-	-	-	1370
		686. 768	○	○	-	-	CC	-	-	3.00	5.66	8.00	12.65	-	28	-	-	-	14	-	-	1370
		686. 808	○	○	-	CA	CC	-	-	3.40	7.07	10.00	15.81	23	28	-	-	11	14	-	-	1370
		686. 828	○	○	-	-	CC	-	-	3.60	7.92	11.20	17.71	-	28	-	-	-	14	-	-	1370
		686. 848	○	○	-	-	CC	-	-	3.80	8.80	12.50	19.76	-	28	-	-	-	14	-	-	1370
		686. 868	○	○	-	-	CC	-	-	4.00	9.90	14.00	22.14	-	28	-	-	-	14	-	-	1370
		686. 888	○	○	-	-	CC	-	-	4.20	11.31	16.00	25.30	-	28	-	-	-	14	-	-	1370
		686. 908	○	○	-	-	CC	-	-	4.50	12.73	18.00	28.46		28	-	-	-	14	-	-	1370
		686. 928	○	-	-	-	-	CE	-	4.70	14.14	20.00	31.62	-	-	32	-	-	-	17	-	1370
		686. 968	-	○	-	-	-	CE	CG	5.30	17.68	25.00	39.53	-	-	32	40	-	-	17	22	1370
		686. 988	○	-	-	-	-	CE	CG	5.60	19.80	28.00	44.27	-	-	32	40	-	-	17	22	1370

B = Bore diameter
Can also be used for air or saturated steam.
* Only available with code CA.

Example for ordering:	Type	+ Material-no.	+ Code	= Ordering no.
	686. 366	+ 30	+ CA	= 686. 366. 30. CA

Conversion formula for the above series: $\dot{V}_2 = \dot{V}_1 * \sqrt{\frac{p_2}{p_1}}$

Tongue-type nozzles for retaining nut Series 684 / 688 / 689

(Mat. no. 16 / 5E)

Series 684

Assembly with retaining nut. Wide flat fan with a sharply delimited spray pattern. Particularly clog-proof. Easy nozzle changing. Simple jet alignment.

Applications:
Foam control in storage tanks, crate washers, cleaning and washing processes requiring powerful and concentrated water jets.

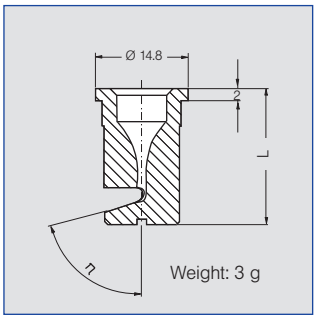

Spray angle ∢	η	Ordering no. Type	Mat.-no. 56 POM	Mat.-no. 5E PVDF	Colour**	B Ø [mm]	V̇ [l/min] p [bar] 1.0	2.0	5.0	L [mm]	Spray width B at p = 2 bar H = 250 mm
140°	75°	**684. 348**	○	-	green	0.7	0.35*	0.50	0.79	20	1360
	75°	**684. 368**	○	○	yellow	0.8	0.45*	0.63	1.00	20	1360
	75°	**684. 408**	○	-	blue	1.0	0.71	1.00	1.58	20	1370
	75°	**684. 448**	○	-	red	1.2	0.88	1.25	1.98	20	1370
	75°	**684. 488**	○	○	brown	1.3	1.13	1.60	2.53	20	1370
	75°	**684. 528**	○	-	grey	1.5	1.41	2.00	3.16	20	1370
	75°	**684. 568**	○	○	white	1.7	1.77	2.50	3.95	19	1370
	75°	**684. 608**	○	-	light blue	1.9	2.23	3.15	4.98	19	1370
	75°	**684. 688**	○	-	green	2.4	3.54	5.00	7.91	17	1370
	75°	**684. 728**	○	○	black	2.7	4.45	6.30	9.96	17	1370
	75°	**684. 808**	○	-	purple	3.4	7.07	10.00	15.81	16	1370

B = Bore diameter · * Differing spray pattern. · ** Material PVDF generally blue

Series 688 / 689

Hard, sharp flat fan, narrowly delimited jet pattern. Not prone to clogging.
Applications:
Foam control in storage tanks, crate washers, cleaning and washing processes requiring powerful and concentrated water jets.

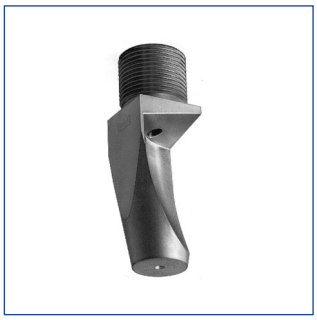

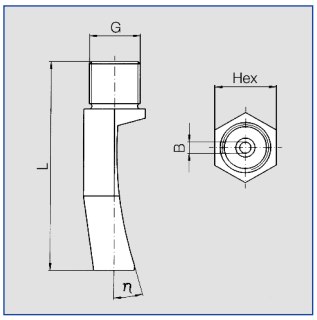

Spray angle ∢	η	Ordering no. Type	Mat.-no. 16 AISI 303	Mat.-no. 5E PVDF	Code G 3/8 BSPT	Code G 3/4 BSPP	B Ø [mm]	V̇ [l/min] p [bar] 0.5	1.0	2.0	5.0	Dimensions L [mm]	Hex [mm]	Weight	Spray width B at p=2 bar H = 250 mm	H = 500 mm
45°	35°	**688. 763**	○	-	CE	-	3.0	4.00	5.66	8.00	12.65	43	19	114 g	220	440
	30°	**688. 843**	○	-	CE	-	3.8	6.25	8.84	12.50	19.76	50	19	133 g	220	440
	29°	**688. 923**	○	-	CE	-	4.8	10.00	14.14	20.00	31.62	59	22	247 g	220	440
	35°	**689. 003**	○	○	-	90	6.0	15.75	22.27	31.50	49.81	80/80	32/24	306/33	250	490

B = Bore diameter

Conversion formula for the above series: $\dot{V}_2 = \dot{V}_1 * \sqrt{\frac{p_2}{p_1}}$

High pressure flat fan nozzles

Series 602 / 608 / 652

Sharp uniform flat fan with an extremely narrow jet depth.
Applications:
High pressure cleaners, steam jet cleaners

Materials:
Nozzle body: stainless steel AISI 303
Insert: hardened stainless steel 1.4034 S

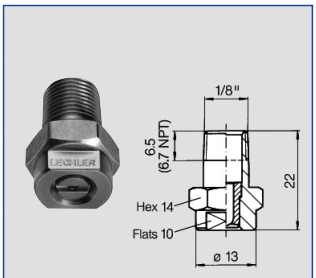

Series 608, Weight: 13 g

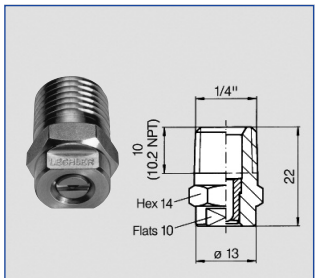

Series 602, Weight: 18 g

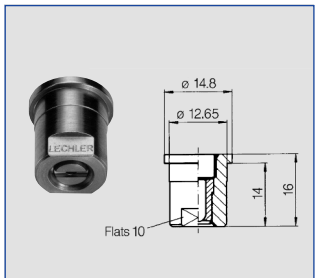

Series 652, Weight: 13 g

US gal/min. at 40 psi	Nozzle-Code			Flow rate code				A Ø [mm]	$\dot{V}$ [l/min]						
	Connection			Spray angle					p [bar]						
	1/8"	1/4"	nut	∢ 20°	∢ 30°	∢ 45°	∢ 60°		40	60	80	100	120	150	200
02	**608**	**602**	**652**	**361**	**362**	**363**	**364**	1.00	2.86	3.50	4.04	4.52	4.95	5.53	6.39
025	**608**	**602**	**652**	**381**	**382**	**383**	**384**	1.10	3.54	4.33	5.00	5.59	6.12	6.85	7.91
03	**608**	**602**	**652**	**401**	**402**	**403**	**404**	1.18	4.31	5.28	6.10	6.82	7.47	8.35	9.64
034	**608**	**602**	**652**	**411**	**412**	**413**	**414**	1.30	4.95	6.06	7.00	7.83	8.57	9.59	11.07
04	**608**	**602**	**652**	**451**	**452**	**453**	**454**	1.35	5.80	7.10	8.20	9.17	10.04	11.23	12.97
045	**608**	**602**	**652**	**471**	**472**	**473**	**474**	1.40	6.51	7.97	9.20	10.29	11.27	12.60	14.55
05	**608**	**602**	**652**	**481**	**482**	**483**	**484**	1.55	7.29	8.92	10.30	11.52	12.62	14.11	16.29
055	**608**	**602**	**652**	**501**	**502**	**503**	**504**	1.60	7.96	9.74	11.25	12.58	13.78	15.41	17.79
06	**608**	**602**	**652**	**521**	**522**	**523**	**524**	1.72	8.70	10.66	12.31	13.76	15.07	16.85	19.46
065	**608**	**602**	**652**	**531**	**532**	**533**	**534**	1.75	9.38	11.49	13.26	14.83	16.25	18.16	20.97
07	**608**	**602**	**652**	**541**	**542**	**543**	**544**	1.80	10.06	12.32	14.22	15.90	17.42	19.47	22.49
075	**608**	**602**	**652**	**551**	**552**	**553**	**554**	1.90	10.75	13.16	15.20	16.99	18.62	20.81	24.04
08	**608**	**602**	**652**	**571**	**572**	**573**	**574**	2.05	11.48	14.06	16.23	18.15	19.88	22.23	25.67
09	**608**	**602**	**652**	**591**	**592**	**593**	**594**	2.10	13.01	15.93	18.40	20.57	22.53	25.19	29.09
10	**608**	**602**	**652**	**601**	**602**	**603**	**604**	2.30	14.43	17.76	20.40	22.81	24.99	27.94	32.26
125	**-**	**602**	**652**	**641**	**642**	**643**	**644**	2.50	17.82	21.82	25.20	28.17	30.86	34.51	39.85
15	**-**	**602**	**652**	**671**	**672**	**673**	**674**	2.70	21.35	26.15	30.20	33.76	36.98	41.35	47.74
175	**-**	**602**	**652**	**701**	**702**	**703**	**704**	3.00	25.03	30.66	35.40	39.58	43.36	48.47	55.97
20	**-**	**602**	**652**	**-**	**-**	**723**	**724**	3.05	28.85	35.33	40.80	45.62	49.97	55.87	64.52
30	**-**	**602**	**652**	**-**	**-**	**793**	**-**	3.90	42.43	51.96	60.00	67.08	73.48	82.16	94.88

A = Equivalent bore diameter

Connection Code	Connection	p_{max} [bar]
A3. 00	BSPT	ca. 350
A3. 07	NPT	ca. 350
A3. 29	Lock nut	ca. 200

Example for ordering:	**Nozzle-Code**	+	**Flow rate code**	+	**Connection-Code**	=	**Ordering no.**
	602	+	**361**	+	**A3. 07**	=	**602. 361. A3. 07**
							(Flat fan 20°; 4.52 l/min. at 100 bar; 1/4“ NPT)

Conversion formula for the above series: $\dot{V}_2 = \dot{V}_1 * \sqrt{\frac{p_2}{p_1}}$

Easy-Clip nozzle system

Quick and easy assembly with clamp. No tools required. Allround swivelling by 30°. Easy adjustment and cleaning.
Applications:
Crate wahsers, cleaning and washing processes.

Materials:
Clamp: Stainless steel AISI 301
Sealing: EPDM
Cylinder pin, Screw, Screw unit: 1.4401.
Body, ball retainer cap: PP, reinforced
Nozzle. ball joint: PP

Sets

existing of
- **Nozzle**
- **Single clamp for 1 1/4" pipe**
- **Ball retainer cap**

Ordering no.	Nozzle Colour	∢	V̇ [l/min] p [bar] 0.5	1.0	1.5	2.0	2.5
676. 724. 53. 31	grey		3.15	4.45	5.45	6.30	7.04
676. 764. 53. 31	brown		4.00	5.66	6.93	8.00	8.94
676. 804. 53. 31	lilac		5.00	7.07	8.66	10.00	11.18
676. 844. 53. 31	yellow	60°	6.25	8.84	10.83	12.50	13.98
676. 884. 53. 31	red		8.00	11.31	13.85	16.00	17.89
676. 904. 53. 31	blue		9.10	12.87	15.76	18.20	20.35
676. 924. 53. 31	green		10.00	14.14	17.32	20.00	22.36

existing of
- **Ball joint**
- **Single clamp for 1 1/4" pipe**
- **Ball retainer cap**

Ordering no.	Ball Colour	Nozzle connection	For nozzle series
092. 081. 53. AB	beige	1/8 BSPP	460, 632, 686,610, 544
092. 081. 53. AD	beige	1/4 BSPP	422, 460, 544, 612, 632, 686
092. 081. 53. AF	beige	3/8 BSPP	422, 460, 632, 686, 688
092. 081. 53. AH	beige	1/2 BSPP	422, 460, 632, 686

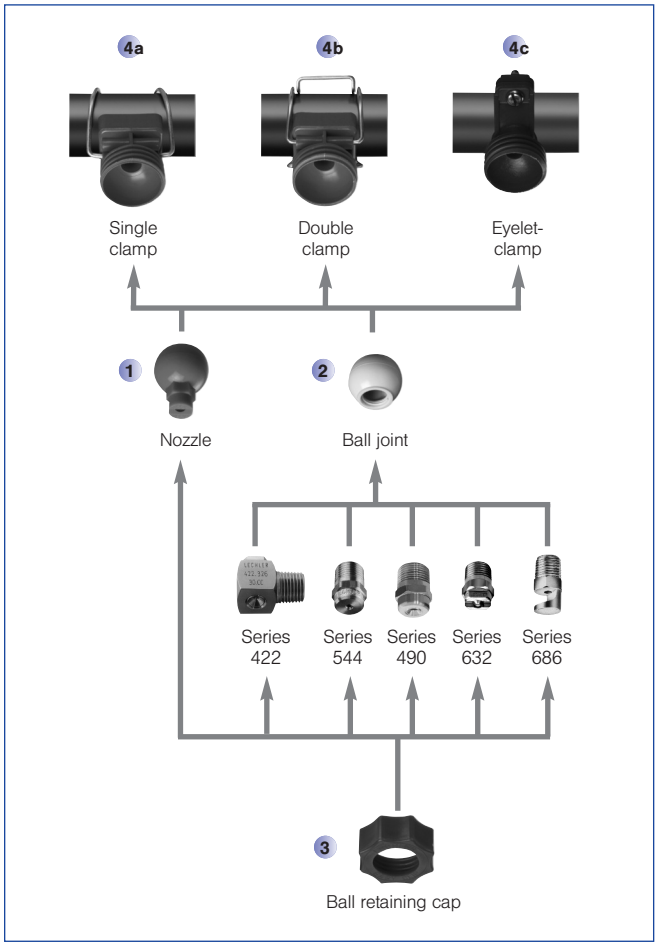

Components

1 Nozzle

Ordering no.	Colour	∢	V̇ [l/min] p [bar] 0.5	1.0	1.5	2.0	2.5
676. 724. 53. 30. 01	grey		3.15	4.45	5.45	6.30	7.04
676. 764. 53. 30. 01	brown		4.00	5.66	6.93	8.00	8.94
676. 804. 53. 30. 01	lilac		5.00	7.07	8.66	10.00	11.18
676. 844. 53. 30. 01	yellow	60°	6.25	8.84	10.83	12.50	13.98
676. 884. 53. 30. 01	red		8.00	11.31	13.85	16.00	17.89
676. 904. 53. 30. 01	blue		9.10	12.87	15.67	18.20	20.35
676. 924. 53. 30. 01	green		10.00	14.14	17.32	20.00	22.36
092. 080. 53. 00. 01	grey	Blind nozzle					

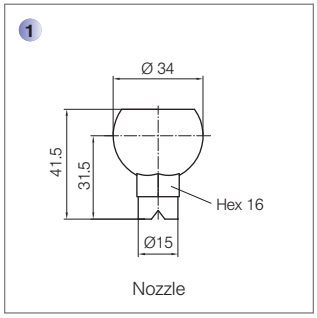

Conversion formula for the above series: $\dot{V}_2 = \dot{V}_1 * \sqrt{\frac{p_2}{p_1}}$

Easy-Clip nozzle system

2 Ball joint

Ordering no.	Colour	Nozzle connection	For nozzle series
092. 080. 53. AB. 01	beige	1/8 BSPP	460, 544, 610, 632, 686
092. 080. 53. AD. 01	beige	1/4 BSPP	422, 460, 544, 612, 632, 686
092. 080. 53. AF. 01	beige	3/8 BSPP	422, 460, 632, 686, 688
092. 080. 53. AH. 01	beige	1/2 BSPP	422, 460, 632, 686

2

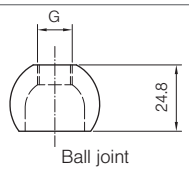

Ball joint

3 Ball retainer cap

Ordering no.
092. 080. 53. 00. 02

3

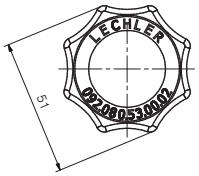

Ball retainer cap

4a Single clamp

Ordering no.	Bore-Ø	For pipe-Ø
092. 080. 53. 00	16 mm	1" (32.0-34.5 mm)
092. 081. 53. 00	16 mm	1 1/4" (40.0-43.0 mm)
092. 082. 53. 00	16 mm	1 1/2" (46.0-49.0 mm)
092. 083. 53. 00	16 mm	2" (58.0-62.0 mm)

Other bore-Ø (13.8 / 20.0 mm) on request.

4a

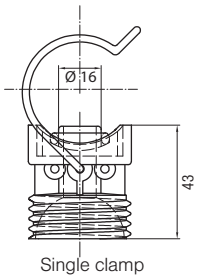

Single clamp

4b Double clamp

Ordering no.	Bore-Ø	For Pipe-Ø
092. 090. 53. 00	16 mm	1" (32.0-34.5 mm)
092. 091. 53. 00	16 mm	1 1/4" (40.0-43.0 mm)
092. 092. 53. 00	16 mm	1 1/2" (46.0-49.0 mm)
092. 093. 53. 00	16 mm	2" (58.0-62.0 mm)

Other bore-Ø (13.8 / 20.0 mm) on request.

4b

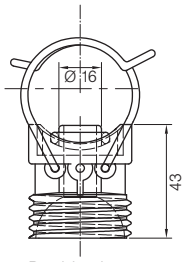

Double clamp

4c Eyelet clamp

Ordering no.	Bore-Ø	For pipe-Ø
090. 023. 53. 43. 10. 0	16 mm	1" (32.0-34.5 mm)
090. 033. 53. 43. 10. 0	16 mm	1 1/4" (40.0-43.0 mm)
090. 043. 53. 43. 10. 0	16 mm	1 1/2" (46.0-49.0 mm)

Other bore-Ø (13.8 / 20.0 mm) on request.

4c

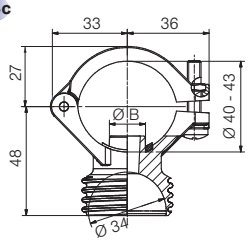

Eyelet clamp 1 1/4"

Conversion formula for the above series: $\dot{V}_2 = \dot{V}_1 * \sqrt{\frac{p_2}{p_1}}$

Flat fan nozzles with ball joint

Series 676

(Mat. no. 16 / 17)

Swivelling nozzle for precise adjusting of jet direction.
No gaskets necessary.
Long, unproblematic service life.
Applications:
Cleaning (e.g. surfaces, filters, belts), crate washers, lubricating, coating.

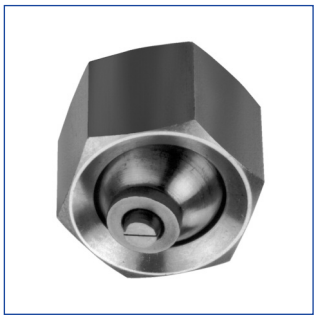

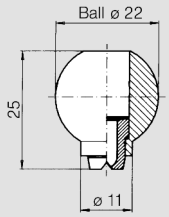

Allround swivelling by 30°
Weight brass: 45 g

Spray angle	Ordering no. Type	Mat.-no. 16 AISI 303	Mat.-no. 30 Brass	A Ø [mm]	E Ø [mm]	V̇ [l/min] p [bar] (pmax = 30 bar) 0.5	1.0	2.0	3.0	5.0	10.0	Spray width B at p = 2 bar H = 250 mm	H = 500 mm
45°	676. 303	○	○	0.70	0.50	0.16*	0.23*	0.32	0.39	0.51	0.72	150	270
	676. 363	○	○	1.00	0.60	0.31*	0.44*	0.63	0.77	1.00	1.40	155	280
	676. 403	○	○	1.20	0.90	0.50*	0.71	1.00	1.23	1.58	2.24	175	320
	676. 483	○	○	1.50	1.10	0.80	1.13	1.60	1.96	2.53	3.58	180	340
	676. 563	○	○	2.00	1.40	1.25	1.77	2.50	3.06	3.95	5.59	185	355
	676. 643	○	○	2.50	1.80	2.00	2.83	4.00	4.90	6.33	8.94	195	370
	676. 723	○	○	3.00	2.40	3.15	4.46	6.30	7.72	9.96	14.09	200	375
	676. 763	○	○	3.50	2.60	4.00	5.66	8.00	9.80	12.65	17.89	200	380
	676. 803	○	○	4.00	3.00	5.00	7.07	10.00	12.25	15.81	22.36	205	385
60°	676. 304	○	○	0.70	0.40	0.16*	0.23*	0.32	0.39	0.51	0.72	215	425
	676. 334	○	○	0.90	0.50	0.22*	0.32*	0.45	0.55	0.71	1.01	220	440
	676. 364	○	○	1.00	0.60	0.31*	0.44*	0.63	0.77	1.00	1.40	230	460
	676. 404	○	○	1.20	0.80	0.50*	0.71	1.00	1.23	1.58	2.24	245	485
	676. 444	○	○	1.35	0.90	0.62*	0.88	1.25	1.53	1.98	2.80	255	495
	676. 484	○	○	1.50	1.00	0.80*	1.13	1.60	1.96	2.53	3.58	260	510
	676. 514	○	○	1.65	1.10	0.95*	1.34	1.90	2.33	3.00	4.25	270	520
	676. 564	○	○	2.00	1.30	1.25	1.77	2.50	3.06	3.95	5.59	280	535
	676. 604	○	○	2.20	1.50	1.58	2.23	3.15	3.86	4.98	7.04	290	550
	676. 644	○	○	2.50	1.60	2.00	2.83	4.00	4.90	6.33	8.94	295	565
	676. 674	○	○	2.70	1.80	2.38	3.36	4.75	5.82	7.51	10.62	300	575
	676. 724	○	○	3.00	2.10	3.15	4.46	6.30	7.72	9.96	14.09	305	590
	676. 764	○	○	3.50	2.30	4.00	5.66	8.00	9.80	12.65	17.89	310	595
90°	676. 216	○	○	0.40	0.20	-	0.08*	0.11	0.14	0.18	0.25	370	700
	676. 276	○	○	0.60	0.30	0.11*	0.16*	0.22	0.27	0.35	0.49	375	720
	676. 306	○	○	0.70	0.40	0.16*	0.23*	0.32	0.39	0.51	0.72	380	740
	676. 336	○	○	0.90	0.50	0.22*	0.32*	0.45	0.55	0.71	1.01	415	800
	676. 366	○	○	1.00	0.50	0.31*	0.44*	0.63	0.77	1.00	1.40	420	810
	676. 406	○	○	1.20	0.70	0.50*	0.71	1.00	1.23	1.58	2.24	430	820
	676. 446	○	○	1.35	0.80	0.62*	0.88	1.25	1.53	1.98	2.80	435	830
	676. 486	○	○	1.50	0.80	0.80*	1.13	1.60	1.96	2.53	3.58	440	835
	676. 516	○	○	1.65	0.90	0.95*	1.34	1.90	2.33	3.00	4.25	440	840
	676. 566	○	○	2.00	1.10	1.25	1.77	2.50	3.06	3.95	5.59	445	850
	676. 606	○	○	2.20	1.20	1.58	2.23	3.15	3.86	4.98	7.04	450	860
	676. 646	○	○	2.50	1.30	2.00	2.83	4.00	4.90	6.33	8.94	455	865
	676. 676	○	○	2.70	1.40	2.38	3.36	4.75	5.82	7.51	10.62	465	875
	676. 726	○	○	3.00	1.70	3.15	4.46	6.30	7.72	9.96	14.09	470	885

A = Equivalent bore diameter · E = narrowest free cross section
* Differing spray pattern

Continued on next page.

Conversion formula for the above series: $\dot{V}_2 = \dot{V}_1 * \sqrt{\frac{p_2}{p_1}}$

Flat fan nozzles with ball joint

Series 676

Spray angle	Ordering no. Type	Mat.-no. 16 AISI 303	Mat.-no. 30 Brass	A Ø [mm]	E Ø [mm]	V̇ [l/min] p [bar] (pmax = 30 bar) 0,5	1,0	2,0	3,0	5,0	10,0	Spray width B at p = 2 bar H = 250 mm	H = 500 mm
120°	**676. 187**	○	○	0,35	0,20	-	0,06*	0,08	0,10	0,13	0,18	630	1200
	676. 217	○	○	0,40	0,20	-	0,08*	0,11	0,14	0,18	0,25	640	1210
	676. 247	○	○	0,50	0,20	-	0,12*	0,16	0,20	0,26	0,36	650	1230
	676. 277	○	○	0,60	0,30	-	0,16*	0,22	0,27	0,35	0,49	660	1250
	676. 307	○	○	0,70	0,30	0,16*	0,23*	0,32	0,39	0,51	0,72	660	1250
	676. 337	○	○	0,90	0,40	0,22*	0,32*	0,45	0,55	0,71	1,01	670	1270
	676. 367	○	○	1,00	0,50	0,31*	0,44*	0,63	0,77	1,00	1,40	670	1270
	676. 407	○	○	1,20	0,60	0,50*	0,71	1,00	1,23	1,58	2,24	670	1270
	676. 447	○	○	1,35	0,60	0,62*	0,88	1,25	1,53	1,98	2,80	675	1270
	676. 487	○	○	1,50	0,60	0,80*	1,13	1,60	1,96	2,53	3,58	680	1275
	676. 517	○	○	1,65	0,90	0,95*	1,34	1,90	2,33	3,00	4,25	685	1280
	676. 567	○	○	2,00	0,90	1,25	1,77	2,50	3,06	3,95	5,59	690	1285
	676. 607	○	○	2,20	1,10	1,58	2,23	3,15	3,86	4,98	7,04	700	1300
	676. 647	○	○	2,50	1,30	2,00	2,83	4,00	4,90	6,33	8,94	700	1300
	676. 677	○	○	2,70	1,40	2,38	3,36	4,75	5,82	7,51	10,62	720	1330
	676. 727	○	○	3,00	1,60	3,15	4,46	6,30	7,72	9,96	14,09	740	1360
	676. 767	○	○	3,50	1,70	4,00	5,66	8,00	9,80	12,65	17,89	760	1400

A = Equivalent bore diameter · E = narrowest free cross section
* Differing spray pattern

Example for ordering:	Type	+	Material-no.	=	Ordering no.
	676. 145	+	**16**	=	**676. 145. 16**

Accessories

Retaining nut
092. 020. 16. 00. 02
Material: AISI 303
092. 020. 30. 00. 02
Material: Brass

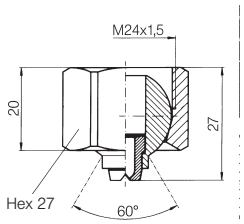

Socket
092. 020. 16. AF. 03
Material: AISI 303
092. 020. 30. AF. 03
Material: Brass

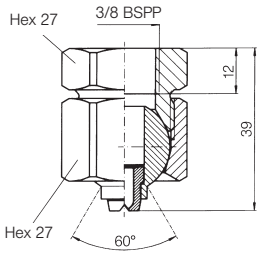

Retaining nipple
092. 024. 16. AC. 03
Material: AISI 303
092. 024. 30. AC. 03
Material: Brass

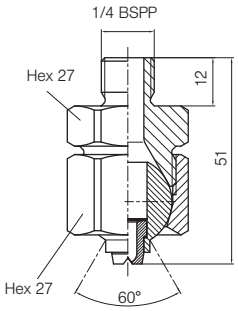

Welding nipple
092. 020. 17. 00. 04
Material: AISI 316Ti

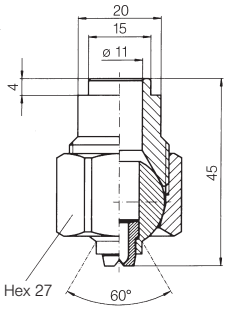

Conversion formula for the above series: $\dot{V}_2 = \dot{V}_1 * \sqrt{\frac{p_2}{p_1}}$

Nozzles and accessories in Hygienic Design

Features

The hygienically designed nozzles and accessories are characterized by their very good surface finish (RA < 0.8 µm). This minimises the tendency for soiling and provides good cleanability. The nozzles and accessories are available in AISI 316L or AISI 316Ti and the seals are made of FDA approved EPDM.

Applications

Aseptic filling, suitable for high hygienc demands.

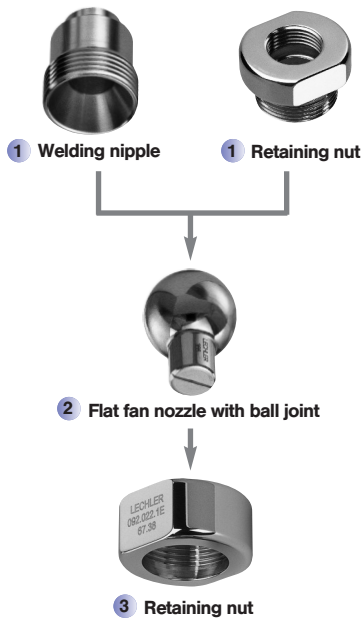

1

Welding nipple for ball joint
Ordering no. 092.020.1E.67.04
Material: AISI 316L

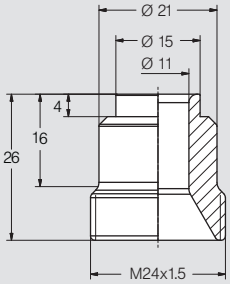

1

Retaining nut for ball joint
Ordering no. 092.020.1E.67.38
Material: AISI 316L

2

Flat fan nozzle with ball joint,
30° Swivel-mounted 30° in all directions.
Material: AISI 316Ti

2

Tongue type nozzle with ball joint,
Swivel-mounted 30° in all directions.
Material: AISI 316L

3

Retaining nut for ball joint
Ordering no. 092.020.1E.67.02
Material: AISI 316L

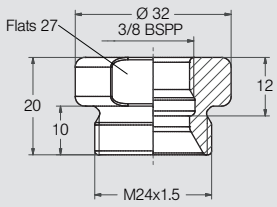

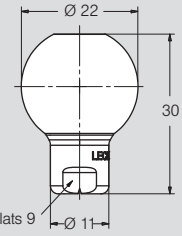

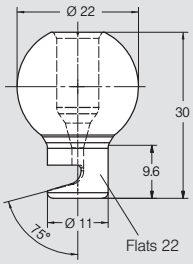

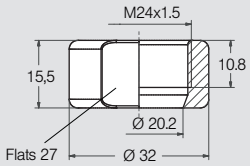

∡	Ordering-no.	V̇ [l/min] at 2 bar
20°	676.641.17.67	4.00
30°	676.402.17.67	1.00
	676.562.17.67	2.50
	676.722.17.67	6.30
	676.802.17.67	10.00
45°	676.763.17.67	8.00
	676.883.17.67	16.00
60°	676.514.17.67	1.90
	676.764.17.67	8.00
90°	676.366.17.67	0.60
	676.646.17.67	4.00
120°	676.647.17.67	4.00
	676.676.17.67	8.00

∡	Ordering-no.	V̇ [l/min] at 2 bar
140°	6ZK.648.1E.67	4.00

Conversion formula for the above series: $\dot{V}_2 = \dot{V}_1 * \sqrt{\frac{p_2}{p_1}}$

Nozzles and accessories in Hygienic Design

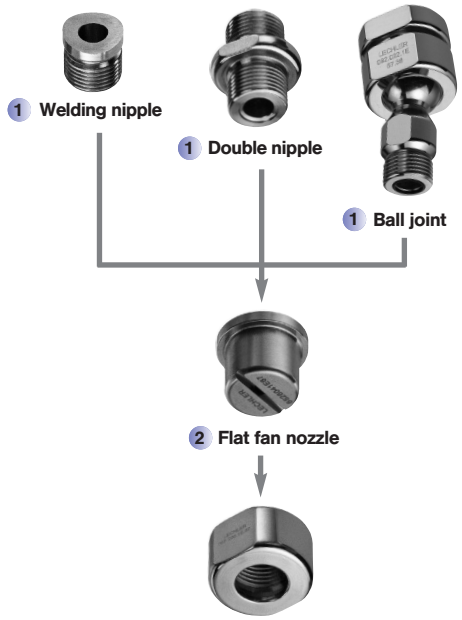

1

Double nipple
Ordering no. 065.211.1E.67
Material: AISI 316L

1

Ball joint
Ordering no. 092.022.1E.67.38
Material: AISI 316L

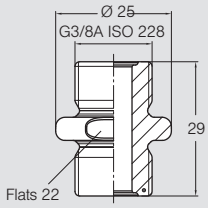

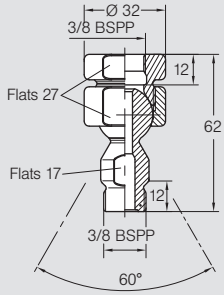

1

Welding nipple
Material: AISI 316L

2

Flat fan nozzle
spray angle 60°
Material: AISI 316L

2

Modular flat fan nozzle
spray angle 60°
Material: AISI 316Ti

3

Retaining nut
Ordering no. 065.200.1E.67
Material: AISI 316L

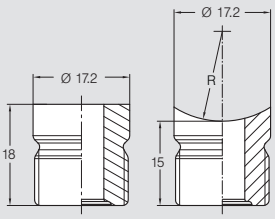

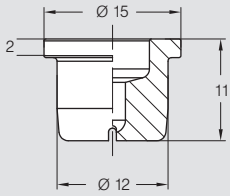

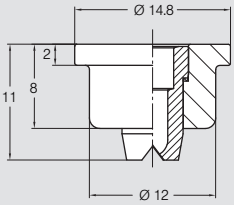

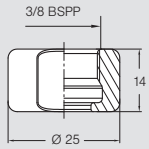

Ordering no.	Radius [mm]
065.210.1E.67.00	no radius
065.217.1E.67.10	10
065.217.1E.67.13	12.5
065.217.1E.67.16	16
065.217.1E.67.20	20
065.217.1E.67.31	31

∢	Ordering no.	V̇ [l/min] at 2 bar
60°	652.604.1E.67	3.10
	652.924.1E.67	20.00

∢	Ordering no.	V̇ [l/min] at 2 bar
60°	652.484.17.87	1.60
	652.514.17.87	1.90
	652.544.17.87	2.20
	652.564.17.87	2.50
	652.604.17.87	3.10
	652.644.17.87	4.00
	652.674.17.87	4.70
	652.724.17.87	6.30
	652.764.17.87	8.00

Conversion formula for the above series: $\dot{V}_2 = \dot{V}_1 * \sqrt{\frac{p_2}{p_1}}$

High-pressure solid stream nozzles

Series 546 / 548 / 550

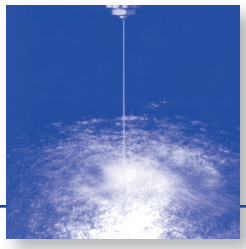

Punctiform, extremely tight, non-dispersing solid stream. Highest impact.
Applications:
High-pressure cleaning, cutting and separating.

Materials:
Nozzle body: Stainless steel AISI 303
Insert: Hardened steel 1.4034 S

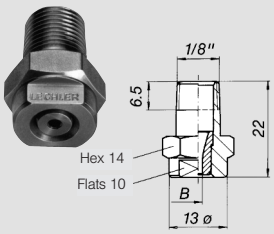

Series 550, weight: 13 g

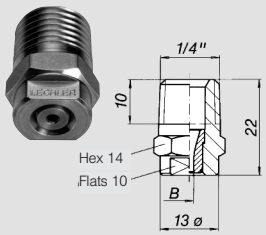

Series 546, weight: 18 g

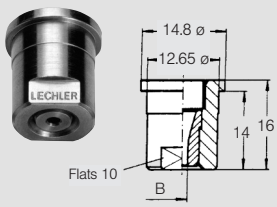

Series 548, weight: 13 g

US gal/min. at 40 psi	Nozzle Code			Flow rate code	B Ø [mm]	V̇ [l/min]						
	Connection					p [bar]						
	1/8"	1/4"	Retaining nut			40	60	80	100	150	200	300
02	**550**	**546**	**548**	**360**	0.84	2.86	3.50	4.04	4.52	5.54	6.39	7.83
03	**550**	**546**	**548**	**400**	1.03	4.31	5.28	6.10	6.82	8.35	9.64	11.81
034	**550**	**546**	**548**	**410**	1.07	4.70	5.80	6.70	7.49	9.17	10.59	12.97
035	**550**	**546**	**548**	**420**	1.11	5.06	6.20	7.16	8.00	9.80	11.32	13.86
04	**550**	**546**	**548**	**450**	1.19	5.80	7.10	8.20	9.17	11.23	12.97	15.88
045	**550**	**546**	**548**	**470**	1.26	6.54	8.00	9.25	10.34	12.66	14.62	17.91
05	**550**	**546**	**548**	**480**	1.33	7.29	8.92	10.30	11.52	14.11	16.29	19.95
055	**550**	**546**	**548**	**500**	1.39	7.96	9.75	11.26	12.59	15.42	17.80	21.81
06	**550**	**546**	**548**	**520**	1.46	8.70	10.66	12.31	13.76	16.85	19.46	23.83
08	**550**	**546**	**548**	**570**	1.69	11.48	14.06	16.23	18.15	22.23	25.67	31.44
10	**550**	**546**	**548**	**600**	1.88	14.32	17.54	20.25	22.64	27.73	32.02	39.21
15	**550**	**546**	**548**	**670**	2.30	21.60	26.46	30.55	34.16	41.84	48.31	59.17
20	**550**	**546**	**548**	**720**	2.66	28.85	35.34	40.80	45.62	55.87	64.52	79.02

B = Bore diameter

Connection code	Connection	p_{max} [bar]
A3. 00	BSPT	approx. 350
A3. 07	NPT	approx. 350
A3. 29	Lock nut	approx. 200

Example for ordering:	**Nozzle Code**	**+**	**Flow rate code**	**+**	**Connection code**	**=**	**Ordering no.**
	550	**+**	**360**	**+**	**A3. 07**	**=**	**550. 360. A3. 07 (Solid stream; 4.52 l/min. at 100 bar; 1/8" NPT)**

Conversion formula for the above series: $\dot{V}_2 = \dot{V}_1 * \sqrt{\frac{p_2}{p_1}}$

Multi-channel flat fan nozzles for air
Whisperblast®, Plastic versions
Series 600. 130 / 600. 484

Particularly silent!

(Mat. no. S2 / 56)

Highly efficient air stream, acting upon areas. Reduced noise levels. Low air consumption.
Applications:
Blowing off and blowing out, cleaning, drying, cooling, sorting with air.

600. 130 (POM or PP)

600. 484. 56 (POM)

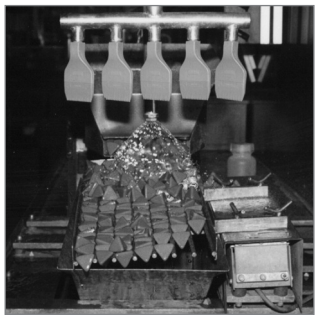

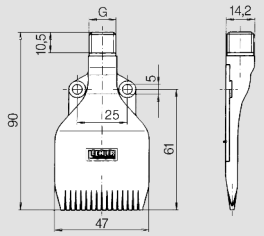

Weight: 23 g · T_{max} POM: 50 °C
Weight: 15 g · T_{max} PP: 60 °C

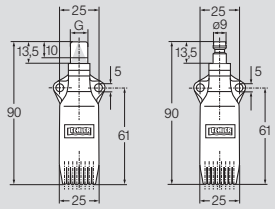

Weight: 16 g · T_{max}: 50 °C

Technical Data

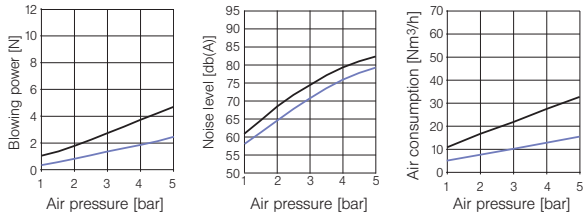

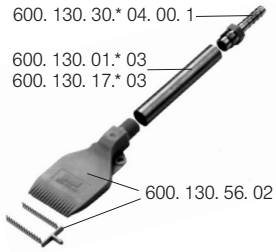

600. 130. 56. 01 with acessories
*01 = 1.0711 / 17 = AISI 316Ti / 30 = Brass

Item 600. 130. 56. 01 does not meet FDA/(EC) No. 1935/2004 requirements

1/4 BSPP

M 12 x 1.25

Ordering no.						
Type	Material no.		Code			
	S2 PP	**56** POM	**1/4 BSPP**	**1/4 NPT**	**M12 x 1.25**	**Quick connection NW 5**
600. 130	○	○	AC	BC	-	-
600. 130 with plug	-	○	02	-	-	-
600. 130 with plug, hose barb (D = 8 mm) and extension tube, steel (L = 85 mm)	-	○	01	-	-	-
600. 484	-	○	AC	BC	HG	00

Example for ordering:	Type	+	Material no.	+	Code	=	Ordering no.
	600. 130.	+	56.	+	AC	=	600. 130. 56. AC

Socket
Ordering no.
095.016.30.14.23.0

Material: Brass

For connection of series 600.130 with compressed air guns.

Ball joints see page 74

Multi-channel flat fan nozzles for air
Whisperblast®, metalic versions
Series 600. 283 / 600. 493 / 600. 562

Particularly silent!

(Mat. no. 1Y)

Metalic versions for higher temperatures.
Highly efficient air stream, acting upon areas. Reduced noise levels. Low air consumption.
Applications:
Blowing off and blowing out, cleaning, drying, cooling, conveying with air.

600. 283. 42 (Aluminium)

600.493.1Y (Stainless steel AISI 316L)

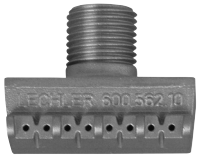

600.562.1Y.10
(Stainless steel AISI 316L)

1/4 BSPP

M 12 x 1.25

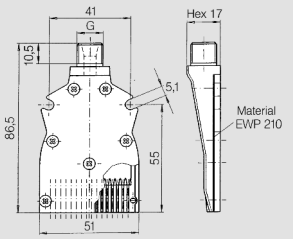

Weight: 60 g · T_{max}: 200 °C

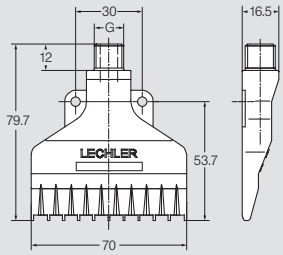

Weight: 126 g · T_{max}: 550 °C

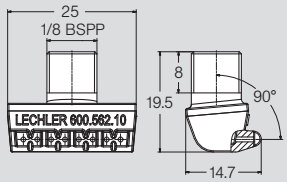

Weight: 17 g · T_{max}: 180 °C

Socket
Ordering no.
095.016.30.14.23.0

Material: Brass

For connection with compressed air guns for the following series:
- 600. 283
- 600. 493

Technical data

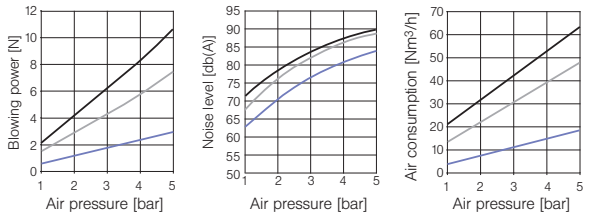

Ordering no.					
Type	Material-no.		Code		
	42 Aluminium	1Y Stainless steel	1/8 BSPP	1/4 BSPP	1/4 NPT
600. 283	○	-	-	AC	BC
600. 493	-	○	-	AC	BC
600. 562. 1Y. 10	-	○	○	-	-

Example for ordering:	Type	+	Material no.	+	Code	=	Ordering no.
	600. 283.	+	42.	+	AC	=	600. 283. 42. AC

Ball joints see page 74

For more information please ask for our special brochure »Nozzles and Accessories for Compressed Air«.

Multi-channel round jet nozzles for air

Series 600. 326 / 600.388

Particularly silent!

Powerful air jet, producing punctiform impact patterns. Low noise level. Low air consumption.
Applications:
Targeted blowing out and blowing off with compressed air guns.

Reduction of noise level of up to 12 dB (A).

600. 326. 5K/3W mounted on a compressed air gun.

600. 326. 5K (ABS)

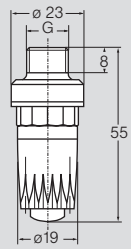

T_{max}: 50 °C

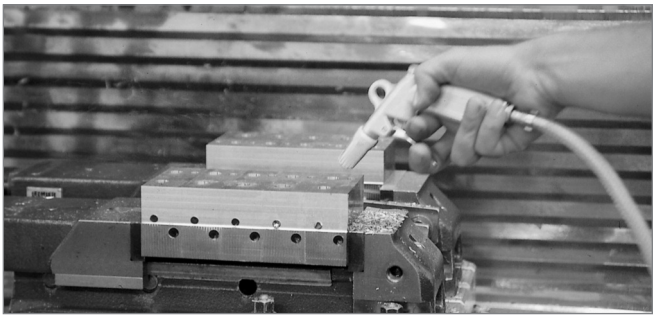

600. 326. 3W (Zinc)

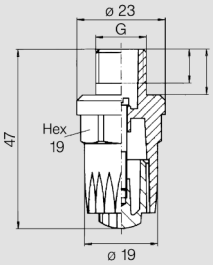

T_{max}: 90 °C

Mini-round jet nozzle. Compact design
Applications:
Especially for blowing out pocket holes.

600. 388. 30 (Brass, POM)

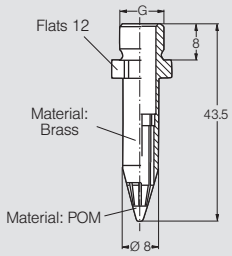

T_{max}: 50 °C

Ball joints see page 74

Ordering no.		Connection thread G	Weight
Type	Code		
600. 326. 5K (Material: ABS)	**AC**	1/4 BSPP	9 g
	HG	M 12 x 1.25	
600. 326. 3W (Material: Zinc)	**AC**	1/4 BSPP	47 g
	HG	M 12 x 1.25	
600. 388. 30 (Material: Brass/POM)	**AA**	1/8 BSPP	12 g
	HG	M 12 x 1.25	

Example:	**Type**	**+**	**Code**	**=**	**Ordering no.**
for ordering	**600. 326. 5K**	**+**	**AC**	**=**	**600. 326. 5K. AC**

Technical data

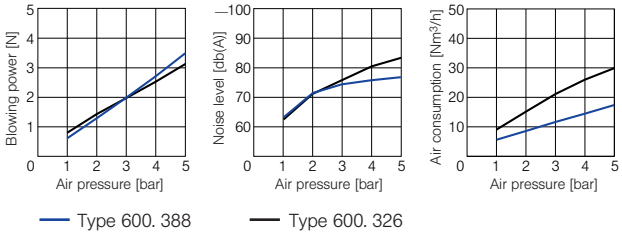

Eyelet clamps / Retaining nuts

(Mat. no. 16 / 17 / 5E)

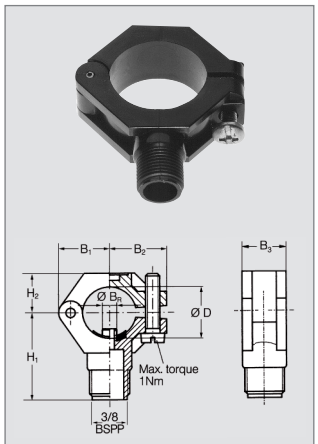

Eyelet clamp for retaining nut

For series	Ordering no. Type	Material no. 51 Polyamid	53 Polypropylene	5E PVDF	Screw	Dimensions [mm] BSPP	Pipe ø	D ø	B_R ø	B_1	B_2	B_3	H_1	H_2	Weight (Polyamid)
2TR/216/302/308/350 468/548/679/684/652	**090. 053**	○	○	○	Material AISI 303	3/8	3/8"	16.5-18.0	6.2	19.0	22.0	18.5	34.5	14.5	20 g
	090. 003	○	○	○		3/8	1/2"	20-22.0	6.2	21.2	23.8	18.5	36.5	16.5	20 g
	090. 013	○	○	○		3/8	3/4"	25-27.5	7.8	24.5	26.5	22.0	39.5	17.5	25 g
	090. 023	○	○	○		3/8	1"	32-34.5	10.8	30.0	31.0	22.0	44.0	21.0	32 g
	090. 033	○	○	○		3/8	1 1/4"	40-43.0	12.8	34.0	35.5	25.0	48.0	25.0	38 g

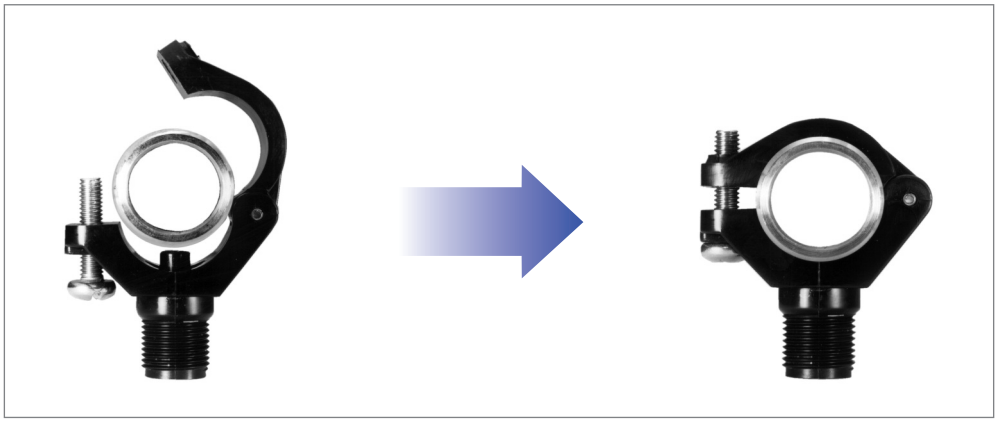

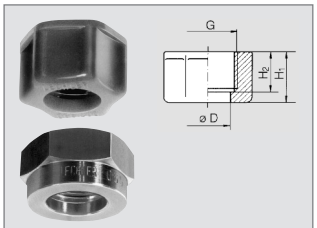

Retaining nuts

For series	Ordering no. Type	Material no. 16 AISI 303	17 AISI 316Ti	30 Brass	56 POM	5E PVDF	Dimensions [mm] BSPP	H_1	H_2	D	Hex	Weight (Brass)
2TR/468/548 652/660/679 684	**065. 200**	○	○	○	-	-	3/8	13.0	10.0	12.8	22	25 g
	065. 200	-	-	-	○	○	3/8	14.5	11.5	12.8	22	
	069. 000	○	○	○	-	-	UNF 11/16	13.0	10.0	12.8	22	
656/657 664/665	**065. 600**	○	○	○	-	○	3/8	16.0	13.0	20.1	32	60 g

For filters and non-return valves please refer to page 75

Example for ordering:	Type	+	Material no.	=	Ordering no.
	090. 053	+	**51**	=	**090. 053. 51**

Accessories

Sockets / Nipples

(Mat. no. 1Y / 17)

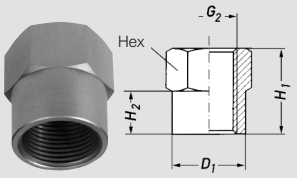

Sockets

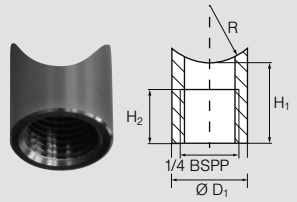

Sockets with radius
(R=10/13/16/20/25 or 31 mm)

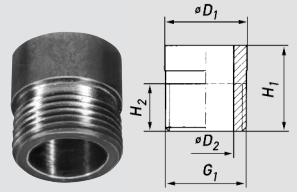

Nipple

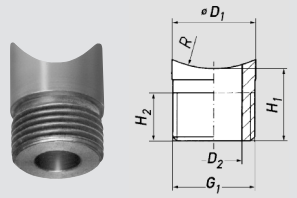

Nipple with radius
(R=10/13/16/20/25 or 31 mm)

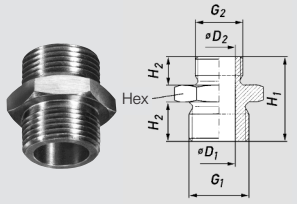

Double nipples

For series	Type	Ordering no. Material no. 02 Steel	1Y AISI 316L	17 AISI 316Ti	30 Brass	53 Polypropylene	Dimensions [mm] G_1	G_2	H_1	H_2	D_1	D_2	Hex	Weight (Brass)
For all nozzles with 1/8" male thread.	040. 270	-	○	-	○	-	-	1/8 BSPP	20	10	13.8	-	14	20 g
For all nozzles with 1/4" male thread.	061. 220	-	○	-	○	-	-	1/4 BSPP	20	10	16.8	-	17	25 g
For all nozzles with 3/8" male thread.	040. 271	-	-	○	○	-	-	3/8 BSPP	20	10	21.5	-	22	25 g
	040. 271	-	-	-	-	○	-	3/8 BSPP	20	10	24.5		22	25 g
For all nozzles with 1/4" male thread.	040.228. xx.yy*	-	○	-	-	-	1/4 BSPP	-	18	12	17	-	-	16 g
2TR/216/302 308/350/548/468 679/684/652	065. 210	○	-	○	○	○	3/8 BSPP	-	18	10	17.2	11.5	-	20 g
306/307 502/503 656/657	065. 610	○	-	○	-	○	3/4 BSPP	-	27	14	28	18	-	61 g
2TR/216/302/308/350 548/468/679/684/652	065. 217. xx. yy*	-	-	○	-	-	3/8 BSPP	-	18	10	17.2	11.5	-	20 g
2TR/216/302/308 350/548/468 679/684/652	065. 215[1)]	-	-	○	○	-	3/8 BSPP	1/4 BSPP	25	10	10	7	22	30 g
	065. 211	-	-	○	○	-	3/8 BSPP	3/8 BSPP	25	10	11.5	-	22	25 g
656/657	065. 611	-	-	○	○	-	3/4 BSPP	3/4 BSPP	35	14	18	-	32	90 g

* Replace **xx** by material no. and **yy** by radius R

[1)] Not to be used with non return valve or filter.

Example for ordering:	Type	+	Material no.	=	Ordering no.
	040. 270	+	1Y	=	040. 270. 1Y

Ball joints

(Mat. no. 16)

Allround swivelling action of 30°.
No sealings, no wear.
Long service life even after many adjustments.
P_{max}: 25 bar.

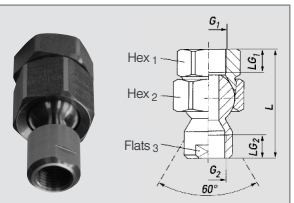

Ball joint with thread connection, female-female

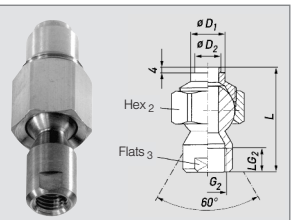

Ball joint with welding connection

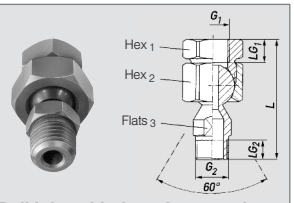

Ball joint with thread connection, female-male

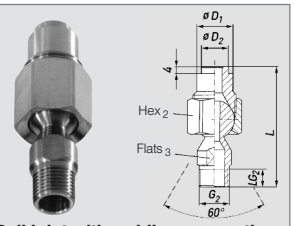

Ball joint with welding connection

For series	Ordering no. Type	Material no. 16 AISI 303/ AISI 316Ti	Material no. 16 AISI 303	Material no. 30 Brass	Code	Dimensions [mm] D_1	D_2	G_1 BSPP	G_2 BSPP	L_{G1}	L_{G2}	L	Hex 1	Hex 2	Flats 3	Weight (Brass)
For all nozzles with 1/4" male thread.	**092. 020**	-	○	○	**AD**	-	-	1/4	1/4	12.0	11.5	60.3	27	27	17	60 g
	092. 021	-	○	○	**AF**	-	-	3/8	1/4	12.0	11.5	58.3	27	27	17	80 g
For all nozzles with 3/8" male thread.	**092. 030**	-	○	○	**AF**	-	-	3/8	3/8	12.0	12.0	56.7	27	30	19	80 g
For all nozzles with 1/4" male thread.	**092. 020**	○	-	-	**SD**	20.0	15.0	-	1/4	-	11.5	64.3	-	27	17	60 g
For all nozzles with 3/8" male thread.	**092. 030**	○	-	-	**SF**	22.0	15.0	-	3/8	-	12.0	58.7	-	30	19	80 g
2TR/216/302/308/350 548/468/679/684/652	**092. 022**	-	○	○	**AD**	-	-	1/4	3/8	12.0	10.0	63.8	27	27	17	80 g
	092. 022	-	○	○	**AF**	-	-	3/8	3/8	12.0	10.0	61.8	27	27	17	85 g
2TR/216/302/308/350 548/468/679/684/652	**092. 022**	○	-	-	**SE**	20.0	15.0	-	3/8	-	10.0	67.8	-	27	17	80 g

Compact ball joints for narrow installation conditions

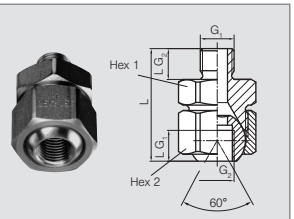

Ball joint with thread connection

For all nozzles with 1/8" male thread.	**092. 010**	-	○	○	**AA**	-	-	1/8	1/8	8.0	8.0	29.3	22	24	-	70 g
For all nozzles with 1/4" male thread.	**092. 024**	-	○	○	**AC**	-	-	1/4	1/4	12.0	12.0	44	27	27	-	140 g
For all nozzles with 3/8" male thread.	**092. 030**	-	○	○	**AE**	-	-	3/8	3/8	12.0	12.0	44	27	30	-	160 g

Example for ordering:	Type	+	Material no.	+	Code	=	Ordering no.
	092. 020	+	16	+	AD	=	092. 020. 16. AD

Accessories

Nonreturn valves / filters

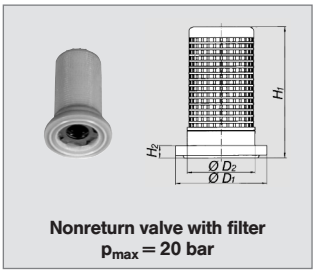

Nonreturn valve with filter
p_{max} = 20 bar

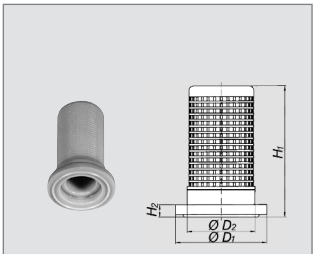

Filter

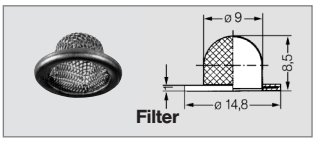

Filter

For nozzle size	Ordering no. Type	Mat.-no. 56 POM	Mat.-no. 26 Monel/Copper	Colour	Opening pressure [bar]	Closing pressure [bar]	Mesh size [mm]	Dimensions [mm] H_1	H_2	D_1	D_2	Weight
xxx.32x-xxx.44x	**065.265** Ball 1.4034 Spring 1.4310	○	–	blue	0.5–1.0	0.4–0.9	0.25	21.5	2.0	14.8	11.0	2 g
xxx.48x-xxx.56x	**065.266** Ball 1.4034 Spring 1.4310	○	–	red	0.4-0.5	0.35-0.45	0.65	21.5	2.0	14.8	11.0	2 g
xxx.32x-xxx.44x	**065.257**	○	–	blue	–	–	0.25	21.5	2.0	14.8	11.0	2 g
xxx.48x-xxx.56x	**065.256**	○	–	red	–	–	0.65	21.5	2.0	14.8	11.0	2 g
xxx.32x-xxx.44x	**065.252**	–	○	–	–	–	0.50	8.5	1.0	14.8	9.0	1 g

Example for ordering:	**Type**	**+**	**Material no.**	**=**	**Ordering no.**
	065. 265	**+**	**56**	**=**	**065. 265. 56**

VarioSpray II
Nozzle valve system for the variable atomization of very small liquid volumes

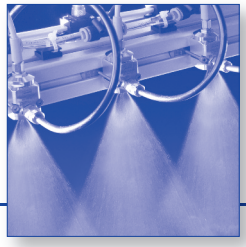

Applications

- Vitamin spraying
- Spraying of low-viscosity sugar solutions
- Anti-Scuffing
- Hygiene applications
- Product moisturizing
- Belt lubrication

Innovative spraying technology opens up new applications

The pressure to standardize is increasing in almost all areas, and the demand for more economical and more environmentally friendly production processes is growing. The newly developed Lechler VarioSpray II nozzle valve system with pulse width modulation impresses with its enormous flexibility and offers the possibility of spraying very small volumes of liquid with precision.

In the case of hydraulic nozzle systems, the narrowest cross section of the spray nozzle determines the liquid flow rate. For reasons of economy and production however, it is not possible to reduce this narrowest cross sections to any further degree desired. For this reason there are physical limits to a nozzle's minimum flow rate. Pneumatic systems are therefore used in order to realize the lowest flow rates. This allows very small flow rates to be generated by using air. However, this pneumatic atomization has its limits where the volumes delivered must be varied and adapted to changed process parameters. This often makes control disproportionately complex.

Using air can also have an unfavorable effect on operating costs, as aerosols form and liquid is lost due to the rebound effect.

VarioSpray II allows very small volumes of liquid to be atomized while using hydraulic nozzles at the same time.

Flexible system

- Simple change to the pulse width and cycle frequency
- Flushing function
- Modular design and modular system
- Start/Stop signal (e.g. via light barrier)

What is pulse width modulation?

Pulse width modulation refers to the variation of the ON time t_{on} / OFF time toff of a square-wave signal when the frequency f remains constant. Here, the frequency f corresponds to the reciprocal value of the period duration T.

The ratio of the ON time t_{on} to the period duration T is referred to as the pulse width ratio (DC = duty cycle). The pulse width ratio determines the flow rate. The valve is open during the ON time t_{on}.
The shorter the DC, the less the flow rate.
Depending on the frequency selected, the pulsation is barely perceptible to the naked eye.

Further information and ordering data on request.

Characteristics	The benefits to you
Minimum flow rates - Liquid saving - Inexpensive simple single fluid nozzle system	→ Cost reduction → Increased efficiency
Frequency up to 100 Hz - Flexible belt speeds	→ Increased productivity → Production time reduction
Control ratio up to 11 : 1 - Large flow rates covered with one nozzle	→ No nozzle change
Variable flow rate - Flexible adjustment of the volume applied for different products	→ Product change time reduction
Different flow rates have no influence on spraying parameters - Constant spray angle - Constant droplet size	→ Constant process parameters
Flow rate is not regulated via the pressure - No high pressure required - Simple configuration	→ Short installation time → Low maintenance costs → Low operating costs
Low-wear valve - Only one movable object	→ Low maintenance
No atomization air - No aerosol formation - Less liquid loss	→ Less risk to health → Does not pollute the environment → Cost reduction
Not susceptible to blockages - Larger cross sections compared to normal nozzles	→ Increased operating safety

Example for flow control

Pulse width ratio 90 %

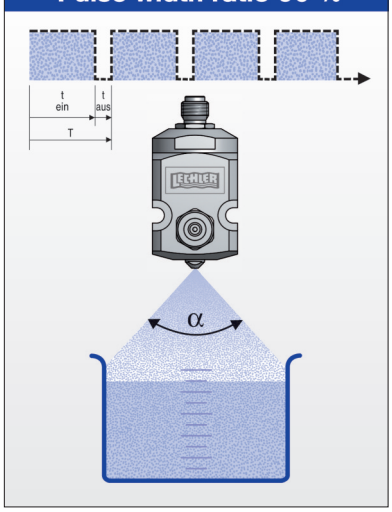

α = constant at DC 10–100%

Pulse width ratio 10 %

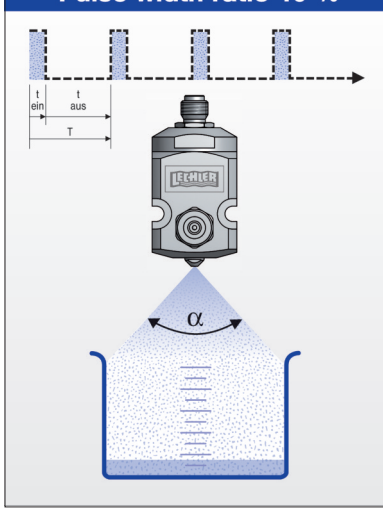

α = constant at DC 10–100%

YOU WILL FIND OTHER NOZZLES FOR USE IN SURFACE TECHNOLOGY IN OUR STANDARD CATALOGUE ...

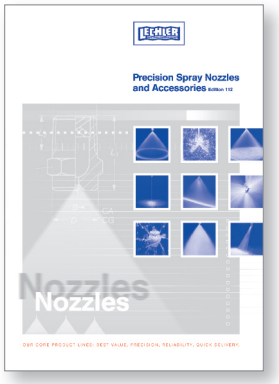

Over the years, our catalogue for precision nozzles and accessories has become an in-demand nozzle technology handbook. It contains valuable tools and comprehensive technical information on Lechler products.

For a long time, many Lechler products have been used to satisfy a very wide range of surface treatment applications.

Pneumatic atomizing nozzles	**Series**	Spray-pattern supply	Mode of liquid	Mixing of Fluids	∢	$\dot{V}$ Water [l/h]	Application/ Construction	**Catalogue Page**
	**166**	Full cone or Flat fan	Pressure principle	inside or outside	20° 45° 60° 80°	0.10 – 132.90	Humidification of air, cooling, disinfection (e.g. bottles), coating, dosing, release agent appli-cations.	**1.5**

Flat fan nozzles	**Series**	∢	$\dot{V}$ [l/min] at **p** = 2 bar	Connection	Application/ Construction	**Catalogue Page**
	**610**	20° 30° 45° 60° 75° 90° 120°	0.05 – 4.00	1/8 BSPP	Cleaning (e.g. surfaces, filters, belts), crate washers, lubricating, coating. **Compact design, suited for narrow installation conditions.**	**4.11**
	**612**	20° 30° 45° 60° 75° 90° 120°	0.05 – 16.00	1/4 BSPP	Cleaning (e.g. surfaces, filters, belts), crate washers, lubricating, coating. **Compact design, suited for narrow installation conditions.**	**4.13**

Solid stream nozzle	**Series**	$\dot{V}$ [l/min]	Connection	Application/ Construction	**Catalogue Page**
	**544**	0.04 – 10.00	1/8 BSPT 1/4 BSPT	Cleaning installations. **Optimized flow technology.** **Highest jet power.** **Solid stream jet.**	**5.4**

... AND IN OUR SPECIAL BROCHURES

We have a collection of information, included in individual subject brochures, covering special nozzles that are also of particular interest to food and beverage.

All documents can be downloaded from our website at **www.lechler.com**.

We would also be happy to send you the brochures.

Brochure „Tank and Equipment Cleaning Nozzles“

Brochure „Nozzles and Accesories for Compressed Air“

Brochure „VarioSpray II Nozzle valve system“

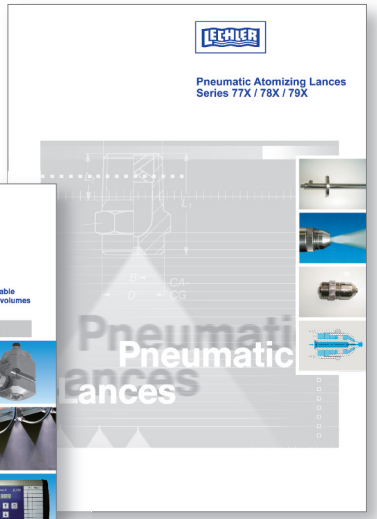

Brochure „Pneumatic Atomizing Lances“

ON THE INTERNET YOU CAN FIND EVEN MORE INFORMATION AND SUPPORT FOR YOUR WORK AT: www.lechler.com

On the internet you can also find additional information about our entire range of services, work aids, our global presence and much more besides – we look forward to your visit.

AND AT http://lechler.partcommunity.com THERE'S 3D DESIGN DATA

3D data on Lechler nozzles and accessories is available to you free of charge for your development and design work. Profit from these advantages:

- Time-saving, direct download of design drawings and technical data.
- Simple product selection similar to the Lechler printed catalogue.
- Preview function with product photo and 3D graphic.
- Available in all common 3D file formats.
- Free use after once-only registration.

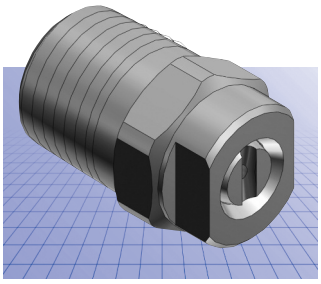

With this service, Lechler once again proves its competence and its high standards as a technology leader.

Take advantage of this offer to simplify your work. We would be happy to support you.

LECHLER WORLD-WIDE

Lechler GmbH
Precision Nozzles · Nozzle Systems
P.O. Box 13 23
72544 Metzingen / Germany
Phone +49 (0 71 23) 962-0
Fax +49 (0 71 23) 962-333

E-mail: info@lechler.de
Internet: www.lechler.com

Belgium: Lechler S.A./N.V. · Avenue Mercatorlaan, 6 · 1300 Wavre · Phone: +32 10 225022 · Fax: +32 10 243901 · info@lechler.be
China: Lechler Intl. Trad. Co. Ltd. · Beijing · Rm. 418 Landmark Tower · No. 8 Dong San Huan Bei Lu · Phone: +86 10 84537968, Fax: +86 10 84537458 · info@lechler.com.cn
Finland: Lechler Oy · Jäspilänkatu 18 · 04360 Kerava · Phone: +358 207 856880 · Fax: +358 207 856881 · info@lechler.fi
France: Lechler France, S.A. · Bât. CAP2 · 66-72, Rue Marceau · 93558 Montreuil cedex · Phone: +33 1 49882600 · Fax: +33 1 49882609 · info@lechler.fr
Great Britain: Lechler Ltd. · 1 Fell Street, Newhall · Sheffield, S9 2TP · Phone: +44 114 2492020 · Fax: +44 114 2493600 · info@lechler.com
India: Lechler (India) Pvt. Ltd. · Plot B-2 · Main Road · Wagle Industrial Estate · Thane (W) - 400604 · Phone: +91 22 40634444 · Fax: +91 22 40634497 · lechler@lechlerindia.com
Sweden: Lechler AB · Kungsängsvägen 31 B · 753 23 Uppsala · Phone: +46 54 137030 · Fax: +46 54 137031 · info@lechler.se
Spain: Lechler S.A. · Avda. Pirineos 7 · Oficina B7, Edificio Inbisa I · 28700 San Sebastián de los Reyes, Madrid · Phone: +34 91 6586346 · Fax: +34 91 6586347 · info@lechler.es
USA: Lechler Inc. · 445 Kautz Road · St. Charles, IL 60174 · Phone: +1 630 3776611 · Fax: +1 630 3776657 · info@lechlerUSA.com

Edition 10/14 · EN · 1.500 · M-2014-3550-101 · www.dgm-walliser.de · S · Subject to technical modification.